Final version published in *Fuel Processing Technology, 2013, 115, 215-221*

New process for producing methanol from coke oven gas by means of CO_2 reforming. Comparison with conventional process.

J.M. Bermúdez[a], N. Ferrera-Lorenzo[a], S. Luque[b], A. Arenillas[a], J.A. Menéndez[a]*

[a] Instituto Nacional del Carbón, CSIC, Apartado 73, 33080 Oviedo, Spain

[b] Department of Chemical and Environmental Engineering, University of Oviedo, 33071 Oviedo, Spain

* Corresponding author. Tel.: +34 985 118972; Fax: +34 985 297672

E-mail address: angelmd@incar.csic.es

Abstract

A novel method of producing methanol from coke oven gas (COG), involving the CO_2 reforming of COG to obtain an appropriate syngas for the synthesis of methanol is proposed. This method is compared with a conventional process of methanol synthesis from natural gas, in terms of energy consumption, CO_2 emissions, raw materials exploitation and methanol purity. Whereas this new process requires the consumption of less energy, the conventional process allows a higher energy recovery. CO_2 emissions are considerably lower with the new process, but the geographic situation of the plant plays a determinant role. From the point of view of raw materials exploitation and methanol purity, the process proposed yields better results. These results suggest that methanol production from coke oven gas would be a more attractive alternative to conventional processes.

Keywords

Methanol; CO_2 Reforming; Coke oven gas; CO_2 emissions; Energy

1. Introduction

Methanol is one of the most important chemical materials produced today due to the wide variety of processes in which it is used [1-6]. Its applications range from chemical uses (as solvent or in the production of organic products such as formaldehyde) to energy uses (e.g., the production of biodiesel or as a fuel itself) [1, 4-6]. Nowadays, methanol is manufactured using a technology based mainly on natural gas as feedstock, although some processes use oil [4, 7].

This process involves four steps: syngas generation, compression, the synthesis of methanol and distillation [4]. Syngas generation and methanol synthesis are areas of increasing scientific development. In a conventional methanol plant, syngas generation accounts for 55 % of the financial outlay required for the process units [4]. Different syngas production processes are available depending on the characteristics of the natural gas and the economics restraints imposed on the plant [2, 4, 7-13]. These processes are steam reforming, autothermal reforming, and combined reforming. However, in the last few years an alternative source of syngas production has emerged: coke oven gas [14-23]. COG is a by-product from coking plants, consisting mainly of H_2 (55–60 %), CH_4 (23–27 %), CO (5–8 %) and N_2 (3–5 %) along with other hydrocarbons, H_2S and NH_3 in small proportions. Most of this gas is used as fuel in the coke ovens, but usually there is a surplus of gas which is used in other processes of the plant, or is simply burnt away in torches [16, 23-27], giving rise to environmental problems, in the form of greenhouse gases emissions. The thermal upgrading of COG would provide an ideal solution to these environmental problems. However, none of the previously mentioned processes for syngas production from natural gas can be used if the final product is methanol. This is due to the high H_2/CO ratios and R parameters (Eq. 1) resulting from these processes if the coke oven gas is used as source of methanol production [15, 18, 20, 21, 23].

$$R, \text{ dimensionless} = (H_2 - CO_2) / (CO + CO_2) \qquad \text{(Eq. 1)}$$

In order for the syngas to be used for the production of methanol the H_2/CO ratio needs to be around 2 whereas the optimum value for the R parameter lies within the range of 2.03-2.05 [1, 2, 28]. A possible solution to this problem could be to generate the syngas

by means of CO_2 reforming (or dry reforming). CO_2 reforming is a reaction between CO_2 and CH_4 that gives rise to H_2 and CO (Reaction 1).

$$CH_4 + CO_2 \leftrightarrow 2\ H_2 + 2\ CO \qquad \text{(Reaction 1)}$$

By applying CO_2 reforming to the coke oven gas, under stoichiometric conditions of methane and carbon dioxide, it is possible to obtain a syngas with a H_2/CO ratio and a R parameter slightly lower than the optimum values. Only minor adjustments of these values would then be required, and this can be done using the H_2 recovered at the end of the process of methanol production [18]. Moreover, the production of methanol from coke oven gas via CO_2 reforming could be considered as a "partial recycling" of carbon dioxide, since half of the carbon dioxide produced, when methanol is used, is consumed during the production process itself [15, 18, 20, 21, 23]. This balance is illustrated in Figure 1.

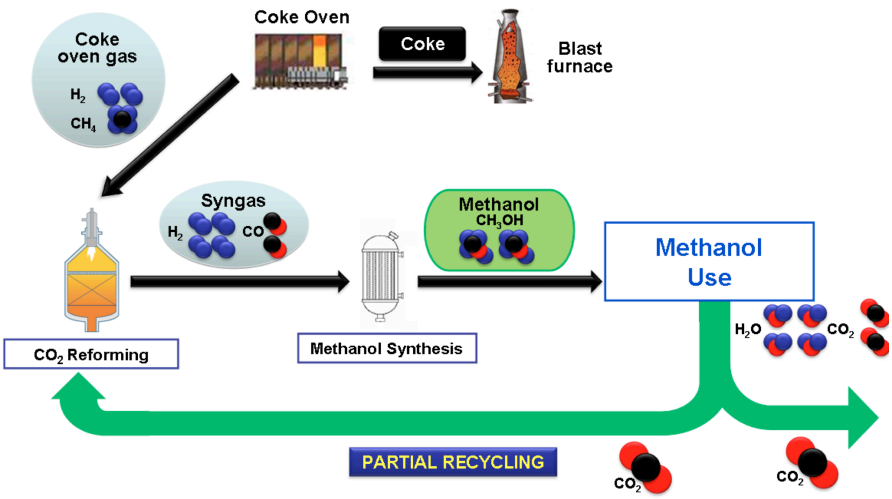

Fig. 1. Partial recycling of CO_2 in the synthesis of methanol from COG via dry reforming.

However, this advantage has yet to be demonstrated, as it is possible that the yields and the energy needs of the process will affect the abovementioned balance. Moreover, no references can be found in the literature to any previous comparison of this technology with that of conventional methanol production. Hence, the aim of the present work is to carry out a comparative simulation analysis of methanol production from coke oven gas

via dry reforming and the conventional process of methanol production from natural gas, using Aspen Plus® software.

2. Simulation Methodology

Two different processes were studied: the conventional production process (CP) and the novel technology proposed for the dry reforming of coke oven gas (DR-COG). These processes were modelled using Aspen Plus® software. In each process a flow rate basis of 1 kmol/h of feed gas, natural gas or coke oven gas, was employed. The compositions of these gases are shown in Table 1.

Table 1. Natural gas and coke oven gas compositions used in the simulation.

Component	Natural Gas (vol. %)	Coke oven gas (vol. %)
CH_4	91.2	26.0
H_2	0	62.0
CO_2	1.0	1.5
CO	0	7.0
N_2	0.5	2.2
C_2H_6	6.4	0.5
C_3H_8	0.8	0
C_4H_{10}	0.1	0
C_2H_4	0	0.8

2.1. CP process model

In the CP process, which is the most widespread methanol production process in use, the natural gas is fed into a reformer where the methane reacts with excess steam

through a steam reforming reaction. Since the H_2/CO ratio and the R parameter of the syngas obtained are higher than that desired, the syngas is fed into a second reactor where it reacts with O_2 through partial oxidation. In this way, the H_2/CO ratio and the R parameter are adjusted to the desired values. Since there is a surplus of H_2O that has not reacted in the first reactor, a condensation stage is required to separate the excess water. The syngas is then introduced into the methanol synthesis loop. Recirculation is required because the conversion in each cycle is very low. A purge is included in the loop to prevent the accumulation of inerts.

The model developed for this study (Figure 2) is composed of:

FIGURE 2

1. A line of compressed natural gas (NG), the composition of which is shown in Table 1.
2. A line of steam production (WATER).
3. A steam reformer (REFORMER) where the NG and WATER react to give rise to the initial syngas (SYNGAS1), the composition of which is still far from that required for methanol production.
4. A line of compressed O_2 (O2-LP).
5. A partial oxidation reactor (POX) where the SYNGAS1 and O2-LP react to give rise to a second syngas. After the excess of water has been separated this syngas is compressed (SYNGAS2) and introduced into the recycling loop.
6. Inside the recycling loop there is a methanol synthesis reactor (SYNTHES) and next a condenser where the products are separated from the unreacted gases (CONDENS2). The unreacted gas stream is split by means of a purge (PURGE) into two streams, the purge stream (PURGE) and a stream of recycled products (RECYCLE1) which are compressed (RECYCLE1) before being mixed with SYNGAS2

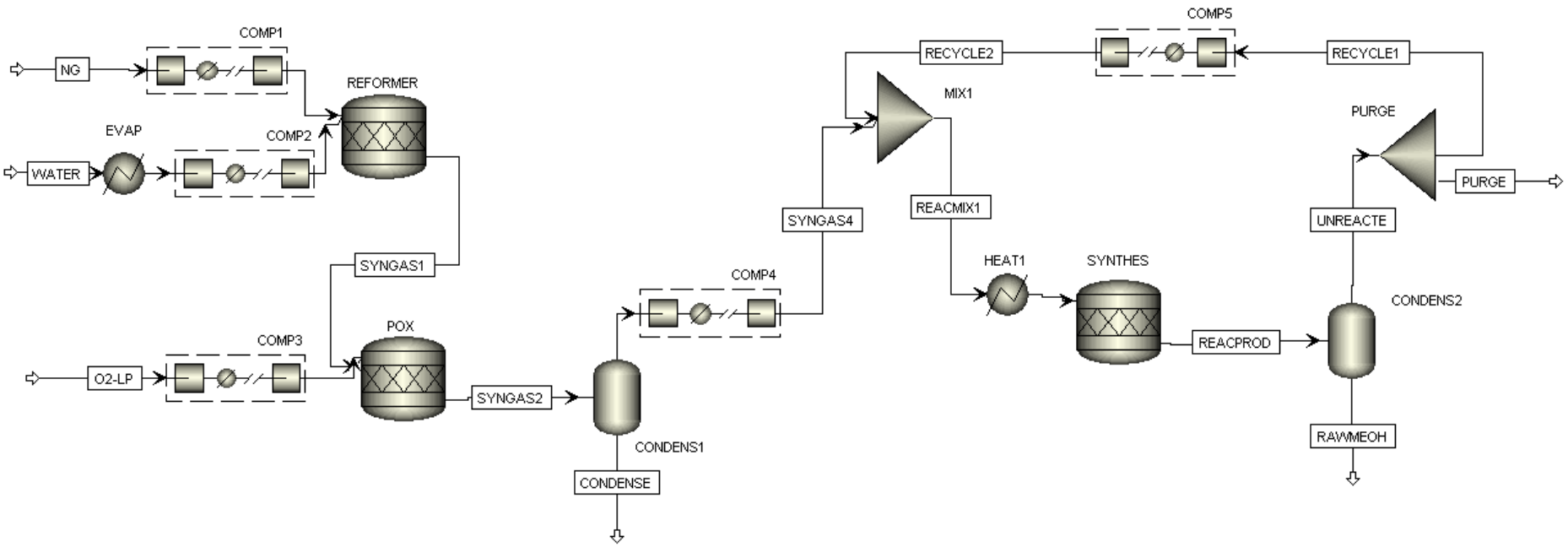

Fig. 2. Aspen Plus® flowsheet of the CP process

Table 2 shows the operation conditions, which have been selected on the basis of available bibliographic data, corresponding to the main units of the process, i.e. steam reforming [2, 4, 7], partial reforming reactor [2, 4, 29, 30] and methanol synthesis reactor [1, 2, 4, 7, 29, 31].

Table 2. Simulation conditions of the main equipment [15, 18, 20, 21]

Conventional (CP)		**Process proposed (DR-COG)**	
Equipment	**Conditions**	**Equipment**	**Conditions**
Steam reformer [2, 4, 7]	800 ºC 30 bar	Dry reformer [15, 18, 20, 21]	900 ºC 1 bar
POX reactor [2, 4, 29, 30]	1000 ºC 30 bar	MeOH Synthesis reactor [1, 2, 4, 7, 29, 31]	230 ºC 75 bar
MeOH Synthesis reactor [1, 2, 4, 7, 29, 31]	230 ºC 75 bar	Splitter	97 % recycled 3 % purged
Purge	97 % recycled 3 % purged		

2.2. DR-COG process model

Figure 3 shows a block diagram of the DR-COG process. In this case there is only one reactor, since it is possible to obtain a suitable syngas in one step. There is then a double loop: one for the recirculation and the other for recovering unreacted H_2 so that the values of the R parameter and the H_2/CO ratio can be adjusted.

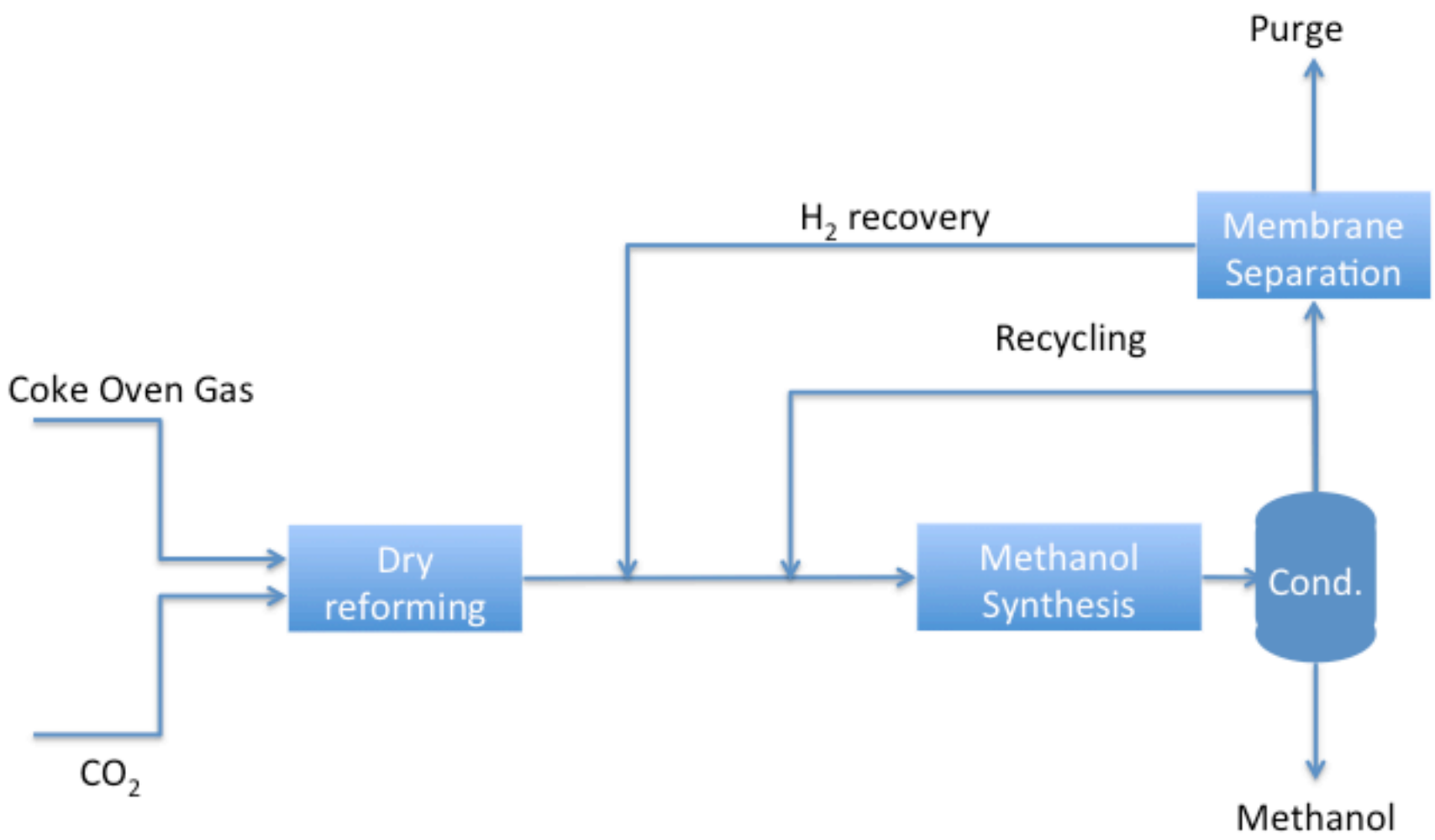

Fig. 3. Block diagram of the proposed new process of methanol synthesis from coke oven gas via dry reforming.

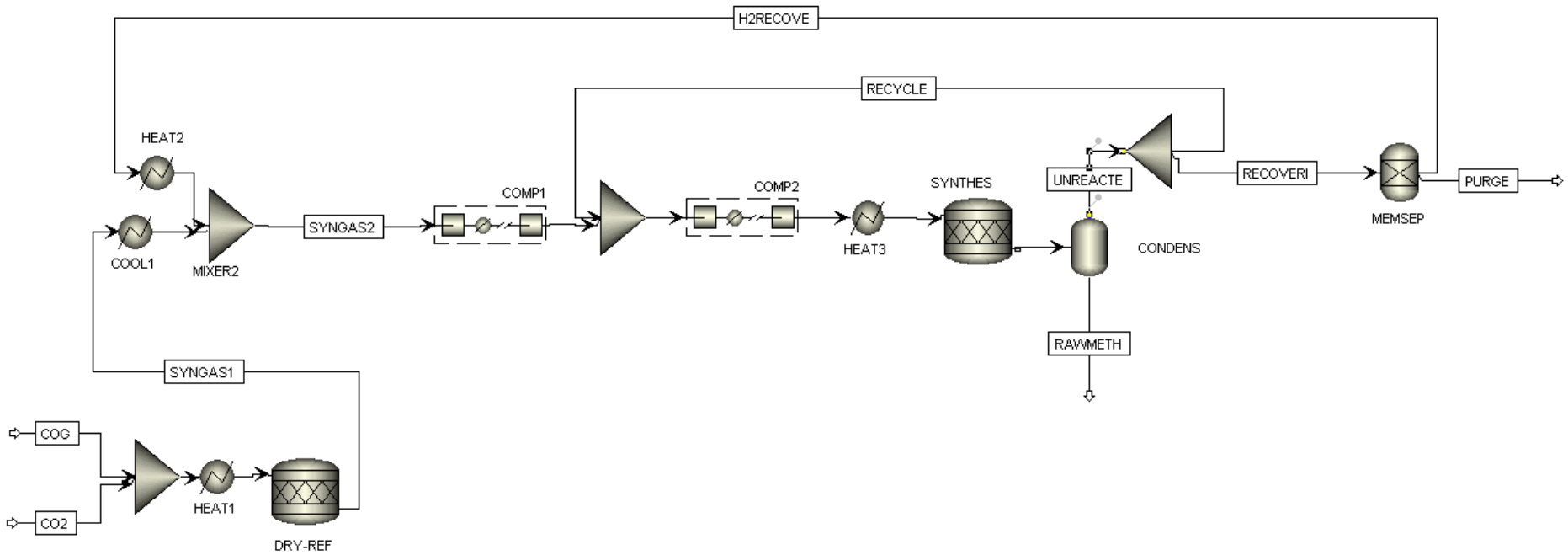

Fig. 4. Aspen Plus® flowsheet of the DR-COG process.

Figure 4 shows the model developed using Aspen Plus®.

This model is composed of:

1. Two initial streams of CO_2 (CO2) and coke oven gas (COG), the composition of which is shown in Table 1.
2. A dry reformer where CO2 and COG react to give rise to the synthesis gas (SYNGAS1), the composition of which is adjusted using the H_2 recovered at the end of the process. The synthesis gas obtained is then introduced into the recycling loop (SYNGAS2).
3. The recycling loop is analogous to that of the CP process with the difference that in this case the stream purged in the CP process (RECOVERI in this case) enters a membrane separation unit (MEMSEP) to allow the recovery of the H_2 needed to adjust the composition of the syngas. Since membrane separation process is not included in the Aspen Plus® software, it was programmed using Fortran and included in the model as a custom-defined split component unit [32]. The modelling of this unit and the Fortran programme are explained in the Supplementary Material. From this unit, two streams are obtained: one rich in H_2 (H2RECOVE) and the other rich in the rest of the purged gases (PURGE).

Table 2 shows the operation conditions, which have been selected in the light of the experimental results previously obtained and available bibliographic data, for each of the main units in the process, i.e. the CO_2 reformer [15, 18, 20, 21] and methanol synthesis reactor [1, 2, 4, 7, 29, 31].

2.3. Model evaluation

In order to study and compare the processes, four parameters were chosen:

- Energy consumption: the total amount of energy consumed in the process was obtained from the model in order to determine how much energy is consumed per kg of methanol produced.

- CO_2 balance: a CO_2 balance was established, that included the emissions of the products and the purged stream, and the CO_2 consumed in the dry reforming in the case of the DR-COG. The emissions of CO_2 resulting from the consumption of energy by the process were included in the balance.

- Carbon and hydrogen yields: in addition to energy consumption and CO_2 emissions, the efficiency of the process in terms of the exploitation of raw materials is also important. Since different raw materials are employed, efficiency was evaluated on the basis of the use of carbon and hydrogen fed in. The carbon and hydrogen yields were calculated as follows (Equations 2 to 5):

CP

$$C_{yield} = MeOH_{prod}/(CH_{4fed} + CO_{2fed} + 2\cdot C_2H_{6fed} + 3\cdot C_3H_{8fed} + 4\cdot C_4H_{10fed}) \quad \text{(Eq. 2)}$$

$$H_{yield} = 4\cdot MeOH_{prod}/(4\cdot CH_{4fed} + 6\cdot C_2H_{6fed} + 8\cdot C_3H_{8fed} + 10\cdot C_4H_{10fed} + 2\cdot(H_2O_{fed}-H_2O_{rec})) \quad \text{(Eq. 3)}$$

where $MeOH_{prod}$ are the moles of methanol produced; CH_{4fed}, CO_{2fed}, C_2H_{6fed}, C_3H_{8fed} and C_4H_{10fed} are the moles of CH_4, CO_2, C_2H_6, C_3H_8 and C_4H_{10} present in the natural gas fed into the process; H_2O_{fed} are the moles of water fed into the reformer; and H_2O_{rec} are the moles of water recovered from the condenser after partial oxidation.

DR-COG

$$C_{yield} = MeOH_{prod}/(CH_{4fed} + 2\cdot C_2H_{6fed} + 2\cdot C_2H_{4fed} + CO_{2fed}) \quad \text{(Eq. 4)}$$

$$H_{yield} = 4\cdot MeOH_{prod}/(2\cdot H_{2fed} + 4\cdot CH_{4fed} + 6\cdot C_2H_{6fed} + 4\cdot C_2H_{4fed}) \quad \text{(Eq. 5)}$$

where $MeOH_{prod}$ are the moles of methanol produced; H_{2fed}, CH_{4fed}, C_2H_{6fed} and C_2H_{4fed} are the moles of H_2, CH_4, C_2H_6 and C_2H_4 present in the coke oven gas fed into the process; and CO_{2fed} are the moles of CO_2 fed into the reformer.

- Quality of the raw methanol: at the end of the process of methanol synthesis, it is necessary to include a purification stage to obtain the required level of purity depending on the end use of the methanol [1]. Since the end use of the methanol lies outside the scope of this work, the final purification stage has not been included. Nevertheless, the methanol purity prior to this stage was evaluated given that the lower the level of purity the higher the cost (in energetic and economic terms) of the purification stage.

3. Results and discussion

3.1. Energy consumption

The energy consumption comparison is based on the amount of methanol produced. In the case of the conventional CP process, with 1 kmol/h of natural gas it is possible to produce 0.86 kmol/h of methanol, whereas in the DR-COG process 1 kmol/h of coke oven gas gives rise to 0.50 kmol/h of methanol.

Table 3 shows the energy consumption of all the units in both processes, with the exception of the membrane separation stage. The energy consumption of these units is the energy needed to compress the feeding gases. However, in the DR-COG process, the feeding gases of the membrane separation unit do not need compression since they already leave the previous stage (condensation) at high pressure. This table also includes the energy that can be obtained from the combustion of the purged gases, which could contribute to a reduction of the overall consumption of energy in the process. Since the entire study has been performed on a flow basis, the data in the table are expressed in units of power instead of units of energy. As can be seen, not all of the units consume energy. Some of them, such as condensers, coolers, methanol synthesis reactors and partial oxidation reactor generate energy. This energy can be recovered in order to reduce the overall energy consumption of the process. However, the recovery will not be total, since it is affected by the yields, which are normally quite low. For this reason, three different cases have been considered for evaluating the energy consumption of each process:

1. Case 1: where only the units which consume energy are taken into account. It is clear that, since the simulation has been performed without considering efficiencies, at least this amount of energy is going to be consumed, whereas it is impossible to determine how much energy can be recovered from the units which generate energy. In this case, the energy consumption of the CP process is 4.92 kW·h/kg of methanol and the consumption of the DR-COG process is 4.08 kW·h/kg of methanol.

2. Case 2: where the units which consume energy and the energy generated by the combustion of the purge are taken into account. The purged gases give rise to a highly energetic by-product stream which can be burnt to obtain energy, something that is common practice in this kind of plants. In this case the energy consumption in both processes is very similar: 2.63 kW·h/kg of methanol in the CP process and 2.59 kW·h/kg of methanol in the DR-COG process.

3. Case 3: where the units which consume energy, the energy generated by the combustion of the purge and the energy recovered from the reactors are taken into account. In this case, the energy recovered from the reactors has been included in the balance, since the recovery of energy from the condenser may be affected by lower yields than those of the reactors. In this case, the CP process energy consumption is 1.07 kW·h/kg of methanol compared to an energy consumption of 1.74 kW·h/kg of methanol for DR-COG.

Although the results of the energy consumption differ depending on the assumptions used in the evaluation, two main conclusions can be drawn: (i) the DR-COG process consumes less energy per kg of methanol produced, (ii) the CP process allows a higher energy recovery. Thus the design of the process and the yields achieved will play a key role in determining whether the DR-COG is able to compete with the CP process from the point of view of energy consumption.

Table 3. Power of the different units and purge streams of each process.

CP process		DR-COG process	
Unit	**Power (kW)**	**Unit**	**Power (kW)**
COMP1	5.01	HEATER1	10.66
EVAP	26.29	DRY-REF	19.01
COMP2	13.64	COOLER1	-11.31
REFORMER	39.56	COMP1	13.40
COMP3	3.52	COMP2	18.24
POX	-19.64	SYNTHES	-13.54
CONDENS1	-63.92	CONDENSE	-31.85
COMP4	3.86	HEATER2	0.14
HEAT1	14.45	HEATER3	3.55
SYNTHES	-22.50		
CONDENS2	-51.04		
COMP5	26.22		
PURGE	-61.61	PURGE	-23.77

In this study no pre-conditioning processes have been considered, despite the fact that they may influence the results of the energy balance. Especially noteworthy is the case of the desulfurization stage. Coke oven gas is used in several processes of steelmaking plants, and it is mandatory to subject it to several conditioning processes, including BTX, NH_3 and H_2S removal. For this reason, COG surplus is conveniently treated and does not need any further pre-treatment prior to its use in the DR-COG process. On the other hand, sulphur compounds are present in large amounts in natural gas (up to 5% vol.), making a desulphurization step is necessary, which increases the energy requirements of the conventional process. It should also be noted that, although it is not included in the balances, the production of pure O_2 for use in the partial oxidation

reactor involves considerable energy requirements that will also affect the energy balance again, increasing the energy requirements of the conventional process.

3.2. CO_2 balance

Table 4 shows the direct CO_2 emissions (i.e., those associated with the different streams involved in the carbon dioxide balance of each process).

Table 4. CO_2 emissions in the different processes

CP		**DR-COG**	
Source	**Emission (kmol/h)**	**Source**	**Emission (kmol/h)**
Methanol	0.817	Methanol	0.491
Purge	0.243	Purge	0.121
		CO_2 feed	- 0.245
Total (mol CO_2/mol CH_3OH)	**1.23**	**Total (mol CO_2/mol CH_3OH)**	**0.74**

Leaving aside the CO_2 emissions resulting from the energy used in the processes, it can be seen from the table that, although partial recycling is not able to recover 50 % of the CO_2 emitted, the DR-COG process is able to prevent 40 % of the CO_2 emitted per mol of methanol produced. However, energy consumption also produces CO_2 emissions that need to be considered in this balance. In order to cover as many different scenarios as possible, all three cases contemplated in the evaluation of energetic consumption were considered. Given that the CO_2 emissions per kW·h produced vary according to the country in which the plant is located, 4 different references have been used: the USA, the People's Republic of China, the European Union and Spain. Table 5 shows the kg CO_2 emitted/kW·h produced in these countries during the period 2007-2010 [33].

Table 5. CO_2 emissions per kW·h (in kg CO_2/kW·h) produced in USA, the People's Republic of China, the European Union and Spain [33].

	2007	**2008**	**2009**	**2010**
USA	0.560	0.545	0.517	0.522
China	0.822	0.803	0.800	0.766
EU	0.480	0.458	0.439	0.429
Spain	0.387	0.327	0.297	0.238

To perform these calculations only the most recent data available (from 2010) have been employed. Figure 5 shows the final emissions of CO_2 per mol of methanol produced in each process for the different scenarios previously defined.

As can be seen, DR-COG gives rise to considerably lower CO_2 emissions, even when the emissions due to energy consumption are included. The differences vary from 6 % in the least favourable case (Case 3 in China) to 31 % in the most favourable case (Case 1 in Spain). Thus, the environmental benefit obtained with DR-COG depends to a large extent on the location of the plant.

As was mentioned in Section 3.1, pre-treatments and the production of O_2 for the partial oxidation reaction can affect the energy balance and, consequently, CO_2 emissions. The need for pre-treatment and generation of O_2 in the case of the CP process will give rise to higher CO_2 emissions, increasing the gap between the emissions of CO_2 produced in the COG-based process and the natural gas based process.

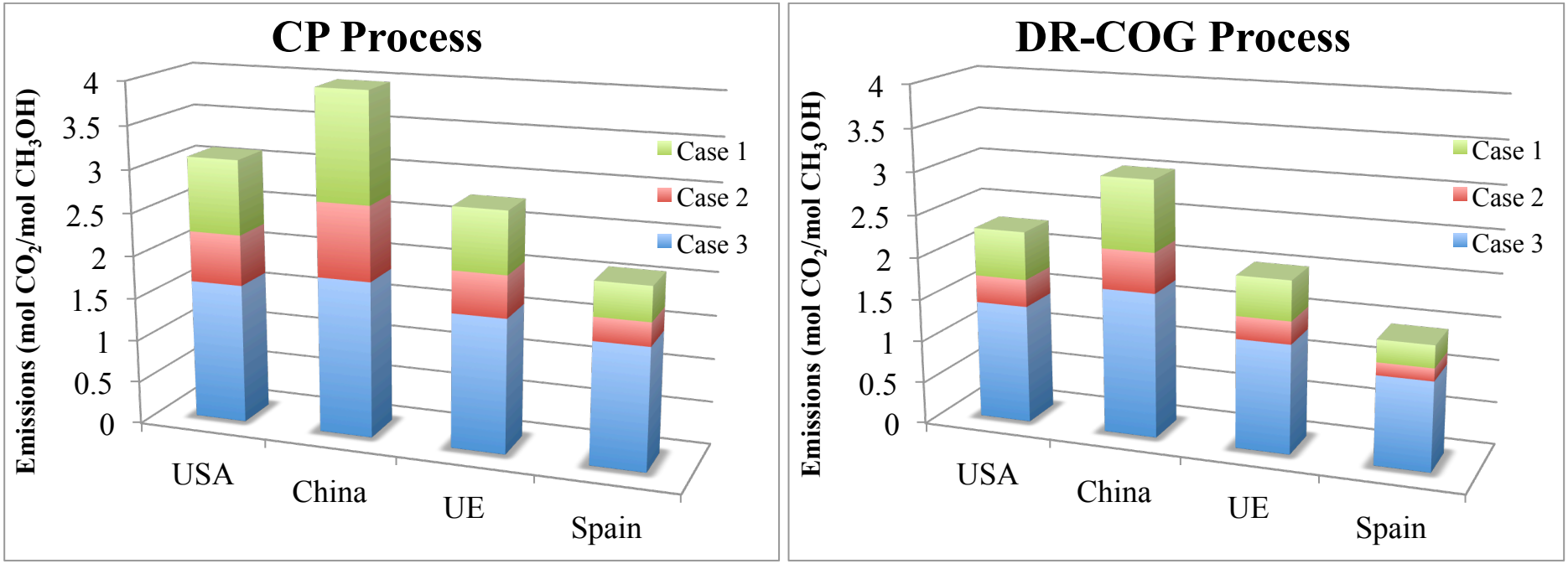

Fig. 5. CO_2 emissions of the CP and DR-COG processes from the streams and energy consumption.

3.3. Carbon and hydrogen yields

Besides energy consumption and CO_2 emissions, another key issue in any industrial process is the need to ensure an efficient exploitation of the raw materials employed. Since in the processes we are comparing the raw materials are different, the most practical way to compare them from the point of view of the raw materials exploitation is to evaluate the carbon and hydrogen yields (Equations 2 to 5), which will provide an idea of the efficiency with which the raw materials are being exploited. Table 6 shows the carbon and hydrogen yields achieved in each process.

Table 6. Carbon and hydrogen yields of the CP and DR-COG processes

	CP	DR-COG
Carbon yield (%)	75.8	79.7
Hydrogen yield (%)	73.2	83.9

Although both processes show high levels of exploitation of the raw materials, the DR-COG process is more efficient than the CP process. Both, the carbon and hydrogen yields are higher in the case of the DR-COG process. Especially noteworthy is the H_2 yield, which is more than 10 % higher in the case of DR-COG. Given that methanol is expected to play an important role as H_2 carrier in the future, this higher yield may be crucial in deciding in favour of the industrial implantation of methanol production from COG using CO_2 reforming to generate the syngas.

3.4. Methanol quality

Finally, the purity of the methanol obtained at the end of the process might necessitate the inclusion of additional purification units (e.g., distillation columns) [1, 4]. Depending on its subsequent use, methanol must be able to satisfy different purity requirements, e.g. 99.85 wt % if it is to be used in chemical synthesis or 97-98 wt % if it is to be blended with gasoline as fuel [1].

In the case of the CP process, simulation data show that raw methanol purity is 96.8 wt %, whereas in the case of the DR-COG, the raw methanol purity is 98.4 wt %. Therefore, methanol produced by means of the DR-COG process can be directly used as fuel in blends with gasoline, whereas additional purification is required for other uses. In the case of the CP process, additional purification stages are necessary, which will entail additional energetic and economic costs.

4. Conclusions

A new process for producing methanol from coke oven gas, using CO_2 reforming to produce syngas, has been proposed and compared with the conventional process from different points of view: that of energetic performance, CO_2 emissions, raw materials exploitation and methanol quality.

In the analysis of energy consumption, it was found that the CP process has higher energy requirements than the DR-COG process. However, the CP process allows a higher energy recovery, which might result in lower energy consumption per kg of methanol produced than in the case of DR-COG.

The CO_2 balance revealed that the DR-COG process is more sustainable than the CP process. With respect to direct emissions, although DR-COG is not able to achieve the 50 % of CO_2 recycling, it avoids 40 % of the CO_2 emitted in the conventional CP process. However, the energy consumed produces substantial emissions that significantly affect the global balance of CO_2, which depends to a large extent on the geographic location of the plant.

From the viewpoint of raw materials exploitation, both processes show a high level of exploitation, though DR-COG is the more efficient. Especially interesting are the results of the H_2 yield, which is more than 10 % higher in the case of DR-COG (83.9 % as against 73.2 % with the CP process).

The raw methanol obtained with the DR-COG process also fulfils the purity requirements for use as a fuel without the need for additional purification stages though a higher level of purification will be required for other uses. In the case of the CP

process, the level of purity achieved is lower, and further purification will be required in all cases, which will entail higher costs.

To sum up, the novel DR-COG process has been shown to be superior to the conventional CP process from the perspective of environment, raw materials exploitation and purification costs. From the energy point of view, an appropriate energy integration strategy will play a decisive role in turning the scales in favour of one process or the other. DR-COG requires lower energy inputs, but the possibility of recovering energy is considerably higher in the CP process, which could result in a reduction in energy consumption to a level below that achieved by DR-COG.

Acknowledgements

JMB acknowledges the support received from the CSIC JAE Program. Financial support from the PCTI Asturias (Projects PEST08-03 and PEST08-21) is also acknowledged. The authors would also like to express their gratitude to Professor José R. Alvarez, of the Department of Chemical and Environmental Engineering at the University of Oviedo, for his help in setting up the Fortran program used in the membrane gas separation unit within Aspen Plus.

References

[1] Olah GA, Goeppert A, Prakash GKS. Beyond oil and gas: the methanol economy. Weinheim, Germany: Wiley-VCH; 2006.
[2] Hamelinck CN, Faaij APC. Future prospects for production of methanol and hydrogen from biomass. Utrecht: Universiteit Utrecht; 2001.
[3] Olah GA. After oil and gas: Methanol economy. Catalysis Letters. 2004;93:1-2.
[4] Uhde-ThyssenKrupp. Methanol Brochure. Uhde - ThyssenKrupp; 2003.
[5] Reed TB, Lerner RM. Methanol: A versatile fuel for immediate use. Science. 1973;182:1299-304.
[6] Nichols RJ. The methanol story: A sustainable fuel for the future. J Sci Ind Res. 2003;62:97-105.
[7] Aasberg-Petersen K, Stub Nielsen C, Dybkjær I, Perregaard J. Large Scale Methanol Production from Natural Gas. 2010.
[8] Wender I. Reactions of synthesis gas. Fuel Process Technol. 1996;48:189-297.

[9] Christian Enger B, Lødeng R, Holmen A. A review of catalytic partial oxidation of methane to synthesis gas with emphasis on reaction mechanisms over transition metal catalysts. Appl Catal A. 2008;346:1-27.
[10] Edwards JH, Maitra AM. The chemistry of methane reforming with carbon dioxide and its current and potential applications. Fuel Processing Technology. 1995;42:269-89.
[11] Ross JRH. Natural gas reforming and CO_2 mitigation. Catalysis Today. 2005;100:151-8.
[12] Rostrup-Nielsen JR. Catalytic Steam Reforming. Catalysis Science and Technology. 1984;5:1-117.
[13] Rostrup-Nielsen JR, Sehested J, Nørskov JK. Hydrogen and synthesis gas by steam- and CO_2 reforming. Advances in Catalysis: Academic Press; 2002. p. 65-139.
[14] Asp B. Biomass- and Coke Oven Gas Based Methanol Production [Master Thesis]. Luleå: Luleå University of Technology; 2007.
[15] Bermúdez JM, Fidalgo B, Arenillas A, Menéndez JA. Dry reforming of coke oven gases over activated carbon to produce syngas for methanol synthesis. Fuel. 2010;89:2897-902.
[16] Guo J, Hou Z, Gao J, Zheng X. Production of syngas via partial oxidation and CO_2 reforming of coke oven gas over a Ni catalyst. Energy and Fuels. 2008;22:1444-8.
[17] Li L, Morishita K, Takarada T. Conversion of hot coke oven gas into light fuel gas over Ni/Al_2O_3 catalyst. J Chem Eng Jpn. 2006;39:461-8.
[18] Bermúdez JM, Arenillas A, Menéndez JA. Equilibrium prediction of CO_2 reforming of coke oven gas: Suitability for methanol production. Chemical Engineering Science. 2012;82:95-103.
[19] Yang Z, Ding W, Zhang Y, Lu X, Zhang Y, Shen P. Catalytic partial oxidation of coke oven gas to syngas in an oxygen permeation membrane reactor combined with NiO/MgO catalyst. International Journal of Hydrogen Energy. 2010;35:6239-47.
[20] Bermúdez JM, Arenillas A, Menéndez JA. Syngas from CO_2 reforming of coke oven gas: Synergetic effect of activated carbon/Ni-γAl_2O_3 catalyst. International Journal of Hydrogen Energy. 2011;36:13361-8.
[21] Bermúdez JM, Fidalgo B, Arenillas A, Menéndez JA. CO_2 reforming of coke oven gas over a $Ni/\gamma Al_2O_3$ catalyst to produce syngas for methanol synthesis. Fuel. 2012;94:197-203.
[22] Zhang G, Dong Y, Feng M, Zhang Y, Zhao W, Cao H. CO_2 reforming of CH_4 in coke oven gas to syngas over coal char catalyst. Chemical Engineering Journal. 2010;156:519-23.
[23] Bermúdez JM, Arenillas A, Luque R, Menéndez JA. An overview of novel technologies to valorise coke oven gas surplus. Fuel Process Technol. 2013;Article in press, Corrected Proof http://dx.doi.org/10.1016/j.fuproc.2012.12.007.
[24] Shen J, Wang ZZ, Yang HW, Yao RS. A new technology for producing hydrogen and adjustable ratio syngas from coke ove gas. Energy and Fuels. 2007;21:3588-92.
[25] Joseck F, Wang M, Wu Y. Potential energy and greenhouse gas emission effects of hydrogen production from coke oven gas in U.S. steel mills. International Journal of Hydrogen Energy. 2008;33:1445-54.

[26] Li YB, Xiao R, Jin B. Thermodynamic equilibrium calculations for the reforming of coke oven gas with gasification gas. Chemical Engineering and Technology. 2007;30:91-8.
[27] Modesto M, Nebra SA. Exergoeconomic analysis of the power generation system using blast furnace and coke oven gas in a Brazilian steel mill. Applied Thermal Engineering. 2009;29:2127-36.
[28] Tjatjopoulos GJ, Vasalos IA. Feasibility analysis of ternary feed mixtures of methane with oxygen, steam, and carbon dioxide for the production of methanol synthesis gas. Industrial and Engineering Chemistry Research. 1998;37:1410-21.
[29] Pinto A, Rogerson PL. Optimizing the ICI Low-Pressure Methanol Process. Chem Eng. 1977;84:102-8.
[30] Armor JN. Applications of catalytic inorganic membrane reactors to refinery products. Journal of Membrane Science. 1998;147:217-33.
[31] Lee JS, Lee KH, Lee SY, Kim YG. A Comparative Study of Methanol Synthesis from CO_2/H_2 and CO/H_2 over a $Cu/ZnO/Al_2O_3$ Catalyst. Journal of Catalysis. 1993;144:414-24.
[32] Couling DJ, Prakash K, Green WH. Analysis of membrane and adsorbent processes for warm syngas cleanup in integrated gasification combined-cycle power with CO 2 capture and sequestration. Ind Eng Chem Res. 2011;50:11313-36.
[33] IEA. CO_2 Emissions from Fuel Combustion 2012. International Energy Agency; 2012.