(19) Europäisches Patentamt
European Patent Office
Office européen des brevets

(11) EP 2 567 159 B1

(12) EUROPEAN PATENT SPECIFICATION

(45) Date of publication and mention of the grant of the patent:
28.12.2016 Bulletin 2016/52

(21) Application number: **11720246.5**

(22) Date of filing: **02.05.2011**

(51) Int Cl.:
F25J 1/00 *(2006.01)* ***F25J 1/02*** *(2006.01)*

(86) International application number:
PCT/US2011/034842

(87) International publication number:
WO 2011/139989 (10.11.2011 Gazette 2011/45)

(54) GAS LIQUEFACTION SYSTEM AND METHOD

SYSTEM ZUR GASVERFLÜSSIGUNG UND ZUGEHÖRIGE METHODE

SYSTÈME ET PROCÉDÉ DE LIQUÉFACTION DE GAZ

(84) Designated Contracting States:
AL AT BE BG CH CY CZ DE DK EE ES FI FR GB GR HR HU IE IS IT LI LT LU LV MC MK MT NL NO PL PT RO RS SE SI SK SM TR

(30) Priority: **03.05.2010 ES 201030658**

(43) Date of publication of application:
13.03.2013 Bulletin 2013/11

(73) Proprietors:
- **Consejo Superior De Investigaciones Científicas (CSIC)**
  28006 Madrid (ES)
- **Universidad De Zaragoza**
  50009 Zaragoza (ES)
- **GWR Instruments, Inc.**
  San Diego, California 92121 (US)

(72) Inventors:
- **MILLÁN, Conrado Rillo**
  E-50009 Zaragoza (ES)
- **MARTÍNEZ, Leticia Tocado**
  E-50001 Zaragoza (ES)
- **REINEMAN, Richard C.**
  La Jolla
  California 92037 (US)
- **WARBURTON, Richard J.**
  Del Mar
  California 92014 (US)

(74) Representative: **WSL Patentanwälte Partnerschaft mbB**
Kaiser-Friedrich-Ring 98
65185 Wiesbaden (DE)

(56) References cited:
GB-A- 2 457 054 **US-A1- 2006 086 099**
US-A1- 2009 293 505

EP 2 567 159 B1

Printed by Jouve, 75001 PARIS (FR)

Description

TECHNICAL FIELD

[0001] This invention relates generally to systems and methods for liquefaction of gases, and more particularly to such systems and methods adapted for improved liquefaction and performance efficiency. A gas liquefaction system according to the preamble of claim 1 is known from US 2009/293505.

BACKGROUND ART

[0002] Helium is a scarce element on earth and its numerous scientific and industrial applications continue to drive a growing demand. For example, common uses of gas-phase helium include welding, lifting (balloons), and semiconductor and fiber optic manufacturing. In the liquid phase, common uses include refrigeration of certain medical and scientific equipment, purging fuel tanks (NASA), and basic research in solid-state physics, magnetism, and a wide variety of other research topics. Because of the widespread utility of helium, its limited availability, and the finite reserves of helium, it is considered a high-cost non-renewable resource. Accordingly, there is an increasing interest in recycling helium and similar noble gases.

[0003] In particular, liquid helium is used as the refrigerant in many applications in which it is necessary to reach temperatures below -200° C. Such applications are frequently related to the use of superconductors, and particularly in low-temperature physics research equipment which operates in evacuated and insulated containers or vacuum flasks called Dewars or cryostats. Such cryostats contain a mixture of both the gas and liquid phases and, upon evaporation, the gaseous phase is often released to the atmosphere. Therefore it is often necessary to purchase additional helium from an external source to continue the operation of the equipment in the cryostat.

[0004] One of liquid helium's most important applications is to refrigerate the high magnetic field superconducting coils used in magnetic resonance imaging (MRI) equipment, which provides an important diagnostic technique by non-invasively creating images of the internal body for diagnosing a wide variety of medical conditions in human beings.

[0005] The largest users of liquid helium are large international scientific facilities or installations, such as the Large Hadron Collider at the CERN international laboratory. Laboratories such as CERN recover, purify, and reliquefy the recovered gas through their own large scale (Class L) industrial liquefaction plants, which typically produce more than 100 liters/h and require input power of more than 100 kW. For laboratories with more moderate consumption, medium (Class M) liquefaction plants are available that produce about 15 liters/hour. These large and medium liquefaction plants achieve a performance, R, of about 1 liter hour/kW (24 liters/day/kW) when the gas is pre-cooled with liquid nitrogen, and about 0.5 liters/hour/kW (12 liters/day/kW) without pre-cooling.

[0006] For smaller scale applications small-scale refrigerators are now commercially available which are capable of achieving sufficiently low temperatures to liquefy a variety of gases and, in particular, to liquefy helium at cryogenic temperatures below 4.2 Kelvin. In the industry, these small-scale refrigerators are normally referred to as closed-cycle cryocoolers. These cryocoolers have three components: (1) a coldhead (a portion of which is called the "cold finger" and typically has one or two cooling stages), where the coldest end of the cold finger achieves very low temperatures by means of the cyclical compression and expansion of helium gas; (2) a helium compressor which provides high pressure helium gas to and accepts lower pressure helium gas from the coldhead; and (3) the high and low pressure connecting hoses which connect the coldhead to the helium compressor. Each of the one or more cooling stages of the cold finger has a different diameter to accommodate variations in the properties of the helium fluid at various temperatures. Each stage of the cold finger comprises an internal regenerator and an internal expansion volume where the refrigeration occurs at the coldest end of each stage.

[0007] As a result of the development of these cryocoolers, small-scale (class S) liquefaction plants have become commercially available, however performance of these liquefiers is presently limited to less than 2 liters/day/kW. In these liquefiers, the gas to be liquefied does not undergo the complex thermodynamic cycles, but rather cools simply by thermal exchange with either the cold stages of the cryocooler, or with heat exchangers attached to the cold stages of the cryocooler. In these small-scale liquefiers, a cryocooler coldhead operates in the neck of a double-walled container, often called a Dewar, which contains only the gas to be liquefied and is thermally insulated to minimize the flow of heat from the outside to the inside of the container. After the gas condenses, the resulting liquid is stored inside the inner tank of the Dewar.

[0008] Ideally such small-scale liquefiers based on a cryocooler would achieve an efficiency comparable to that of the large and medium scale liquefiers. However, in practice, the achievable liquefaction performance in terms of liters per day per kW has been significantly less for these small-scale liquefiers than the performance realized by the larger Class M and Class L liquefaction plants. Accordingly, there is much room for improving the performance of small-scale liquefiers, and such improvements would be of particular benefit in the art.

SUMMARY OF INVENTION

Technical Problem

[0009] Currently available small-scale liquefaction plants for producing less than 20 liters of liquefied cryo-

gen per day, or "Class S" liquefiers, are substantially inefficient when compared to performances obtained by larger scale liquefaction plants. In addition, the medium and large scale plants involve substantial complexity, require extensive maintenance, and their liquefaction rates are far in excess of the needs of many users. In accordance with these limitations, a "Class S" liquefier which can achieve operating efficiencies greater than 2.0 liters/day/kW has not previously been available.

[0010] GB 2 457 054 as well as the above cited US 2009/293505 are both designed as recondensing systems in low temperature device cryostats with the purpose to keep the system at the low design temperature required for operating e. g. superconducting devices such as a SQUID in US 2009/293505 or a superconducting magnet in GB 2 457 054. These systems are therefore not designed for a maximum liquefaction rate but rather for optimized cooling of the system. In particular, an optimized liquefaction rate may rather not be obtained at the typical lower temperatures provided for a safe operation of said superconducting devices as considered by the above documents.

Solution & Advantages of the invention

[0011] In order to obtain a liquefaction system with optimized liquefaction rate, there is provided a liquefaction system according to claim 1. It is a purpose of embodiments of this invention to provide a gas liquefaction system, and methods for liquefaction of gas therein, based on a cryocooler, that is adapted to utilize the thermodynamic properties of gaseous elements to extract increased cooling power from the cryocooler by operating at elevated pressures, and hence elevated liquefaction temperatures, wherein the increased cooling power of the cryocooler is utilized to improve the liquefaction rate and performance of the system.

[0012] To accomplish these improvements, the gas liquefaction system is adapted with a means for controlling pressure within a liquefaction region of the system such that an elevated pressure provides operation at increased liquefaction temperature as described above. By precisely controlling gas flowing into the system, an internal liquefaction pressure can be maintained at an elevated threshold. At the elevated pressure, just below the critical pressure, the increased cooling power of the coldhead is utilized.

[0013] The liquefaction region is herein defined as a volume within the Dewar including a first cooling region adjacent to a first stage of a cryocooler where gas entering the system is initially cooled, and a second condensation region adjacent to a second or subsequent stage of the cryocooler where the cooled gas is further condensed into a liquid- phase. Thus, for purposes of this invention, the liquefaction region includes the neck portion of the Dewar and extends to the storage portion where liquefied cryogen is stored.

[0014] In various embodiments of the invention, the means for controlling-pressure-can include a unitary pressure control module being adapted to regulate an input gas flow for entering the liquefaction region such that pressure within the liquefaction region is precisely maintained during a liquefaction process. Alternatively, a series of pressure control components selected from solenoid valves, a mass flow meter, pressure regulators, and other pressure control devices may be individually disposed at several locations of the system such that a collective grouping of the performance of small-scale liquefiers, and such improvements would be of particular benefit in the art.

SUMMARY OF INVENTION

Technical Problem

[0015] Currently available small-scale liquefaction plants for producing less than 20 liters of liquefied cryogen per day, or "Class S" liquefiers, are substantially inefficient when compared to performances obtained by larger scale liquefaction plants. In addition, the medium and large scale plants involve substantial complexity, require extensive maintenance, and their liquefaction rates are far in excess of the needs of many users. In accordance with these limitations, a "Class S" liquefier which can achieve operating efficiencies greater than 2.0 liters/day/kW has not previously been available.

Solution & Advantages of the invention

[0016] It is a purpose of embodiments of this invention to provide a gas liquefaction system, and methods for liquefaction of gas therein, based on a cryocooler, that is adapted to utilize the thermodynamic properties of gaseous elements to extract increased cooling power from the cryocooler by operating at elevated pressures, and hence elevated liquefaction temperatures, wherein the increased cooling power of the cryocooler is utilized to improve the liquefaction rate and performance of the system.

[0017] To accomplish these improvements, the gas liquefaction system is adapted with a means for controlling pressure within a liquefaction region of the system such that an elevated pressure provides operation at increased liquefaction temperature as described above. By precisely controlling gas flowing into the system, an internal liquefaction pressure can be maintained at an elevated threshold. At the elevated pressure, just below the critical pressure, the increased cooling power of the coldhead is utilized.

[0018] The liquefaction region is herein defined as a volume within the Dewar including a first cooling region adjacent to a first stage of a cryocooler where gas entering the system is initially cooled, and a second condensation region adjacent to a second or subsequent stage of the cryocooler where the cooled gas is further condensed into a liquid-phase. Thus, for purposes of this

invention, the liquefaction region includes the neck portion of the Dewar and extends to the storage portion where liquefied cryogen is stored.

[0019] In various embodiments of the invention, the means for controlling pressure can include a unitary pressure control module being adapted to regulate an input gas flow for entering the liquefaction region such that pressure within the liquefaction region is precisely maintained during a liquefaction process. Alternatively, a series of pressure control components selected from solenoid valves, a mass flow meter, pressure regulators, and other pressure control devices may be individually disposed at several locations of the system such that a collective grouping of the individualized components is adapted to provide control of an input gas entering into the liquefaction region of the system.

[0020] In certain embodiments of the invention, the liquefied gas element is helium. The helium gas is then liquefied at pressures close to 2.27 bar and at about 5.19 K to maximize the power available from the closed-cycle cryocooler. As indicative data, for a preferred embodiment of the invention, the system is capable of liquefying a mass of 19 kg of helium from 105,000 liters of helium gas under standard conditions into a container of 150 liter volume. This is attained with a liquefaction rate that exceeds 65 liters/day (or 260 g/hour) at 5.19 K, which is equivalent to 50 liters/day at 4.2 K, using a typical cryocooler that generates 1.5 W of cooling power at 4.2 K with a consumption of 7.5 kW of electrical power. The performance factor, R, is therefore >7 liters/day/kW, which is a significant improvement over currently available small-scale liquefiers. Naturally, as the efficiencies of the cryocoolers themselves continue to improve, so too will the performance of the gas liquefaction system described herein.

[0021] The aforementioned liquefaction improvements are achieved by a gas liquefaction system for liquefying gas comprising:

[0022] a gas intake module configured to provide gas to the system from a gas source;

[0023] a thermally isolated container, whose upper part is comprised of at least one neck portion, and further comprises at least one interior tank configured to hold gas and the resulting liquid from gas that has already been liquefied;

[0024] at least one cryocooler coldhead located at the top of the thermally isolated container, with its cold portion at least partially extending within the neck portion and routed toward the interior tank of the container;

[0025] a gas compressor configured for providing compressed gas to the cryocooler coldhead by means of confections for the operation of the cryocooler;

[0026] at least one gas pressure control mechanism configured to control the gas intake pressure flowing from the gas intake module and to adjust such pressure to the required gas pressure inside the system; and

[0027] control devices configured to control the performance of the system and the cryocooler coldhead by means of the gas pressure control mechanisms.

[0028] The system according to embodiments of the invention is adapted to maintain precise control over the vapor pressure inside the container, and thus is adapted to maintain precise control of the temperature and hence the power of the cryocooler where condensation is produced. Consequently, the system allows control of the operating point and power of the cryocooler, as determined by the temperatures of its one or more stages, and thereby the amount of heat that can be extracted from the gas, both for its pre-cooling from room temperature to the point of operation, and for its condensation and liquefaction.

[0029] Another aspect of the invention provides a gas liquefaction method that makes use of the gas liquefaction system disclosed in the present application which comprises the following steps:

providing an amount of gas to the gas liquefaction system through the gas intake module;
regulating the pressure of the gas entering the interior tank by means of gas control mechanisms and the control devices;
regulating the power of the cryocooler coldhead by means of the gas pressure control mechanisms and the control devices to determine a rate of liquefaction;
controlling a rate of pressure change of the incoming gas to the interior tank by means of the gas pressure control mechanisms to optimize the liquefaction rate inside the interior tank both during and after pressure changes; and
regulating a pressure of the gas present in the interior tank of the isolated container to a constant determined value, to set the desired liquefaction rate.

[0030] In sum, the gas liquefaction system described in the detailed Description below achieves much higher efficiencies than existing cryocooler-based liquefiers by performing the gas liquefaction at a higher pressure and therefore a higher temperature, where the cryocooler has much greater cooling power to perform the liquefaction and the cryogen being liquefied has a much lower heat of condensation. The liquefaction efficiency of the system is further enhanced and stabilized by precisely controlling the flow rate of the room temperature gas entering the liquefaction region, and thereby precisely controlling the pressure of the condensing gas in the liquefaction region of the system. The two-fold effect of higher cryocooler power and lower heat of condensation at the higher condensation pressure, further enhanced by the precise pressure control, allows this new gas liquefaction process to achieve much higher rates of liquefaction with less input power to the cryocooler than is presently available from other cryocooler-based liquefiers.

BRIEF DESCRIPTION OF THE DRAWINGS

[0031] The characteristics and advantages of this invention will be more apparent from the following detailed description, when read in conjunction with the accompanying drawings, in which:

Fig. 1 is a phase diagram of helium 4;
Fig. 2 is the load map for a typical cryocooler having 2 stages, which shows the cooling power of both the first and second stages of the cryocooler at various temperatures, as well as several operating points (a, b and c) of the coldhead during a trajectory characteristic of a typical liquefaction cycle of this liquefaction system;
Fig. 3 is a schematic diagram of the system and its composite elements according to at least one embodiment of the invention;
Fig. 4 is a general schematic of a portion of the system for improved liquefaction of cryogen gas of Fig. 3, further illustrating convection paths about a liquefaction region of the system; and
Fig. 5 is a schematic of the system according to Fig. 4, further depicting a dashed area within the system being referred to herein as a liquefaction region.

DESCRIPTION OF EMBODIMENTS

[0032] In the following description, for purposes of explanation and not limitation, details and descriptions are set forth in order to provide a thorough understanding of the present invention. However, it will be apparent to those skilled in the art that the present invention may be practiced in other embodiments that depart from these details and descriptions without departing from the spirit and scope of the invention. Certain embodiments will be described below with reference to the drawings wherein illustrative features are denoted by reference numerals.

[0033] In a general embodiment of the invention, a liquefaction system, also referred to herein as a cryostat, includes an isolated storage container or Dewar comprising a storage portion and a neck portion extending therefrom and connected to an outer vessel which is at ambient temperature. The Dewar is insulated by a shell with the volume within the shell external of the storage portion being substantially evacuated of air. The neck portion is adapted to at least partially receive a cryocooler coldhead. The coldhead may comprise one or more stages, each having a distinct cross section. The neck portion of the isolated container may be optionally adapted to geometrically conform to one or more stages of the coldhead cryocooler in a stepwise manner. The isolated container further comprises a transfer port extending from the storage portion to an upper surface of the Dewar. A control mechanism is further provided for controlling gas flow and, thereby, pressure within a liquefaction region of the Dewar. The control mechanism generally includes: a pressure sensor for detecting pressure within the liquefaction region of the cryostat; a pressure regulator or other means for regulating pressure of gas entering the liquefaction region of the Dewar; a mass flow meter; and one or more valves for regulating input gas flow entering the liquefaction region. In this regard, the control mechanism is further connected to a computer for dynamically modulating input gas flow, and hence, pressure within the liquefaction region of the cryostat for yielding optimum efficiency.

[0034] Although not illustrated, it should be noted that the cryostat may comprise one or more storage portions and one or more neck portions extending therefrom within the isolated container.

[0035] In one embodiment of the invention, the refrigeration coldhead of the gas liquefaction system is routed toward the interior tank of the container and comprises at least one stage defining a refrigeration stage.

[0036] In another embodiment of the invention, the cryocooler coldhead comprises a cylinder that routes toward the interior tank of the container consisting of a first stage and a second stage, both parallel-oriented to the neck of the container, and that collectively define two refrigeration stages.

[0037] In yet another embodiment, the cryocooler coldhead routed toward the interior tank of the container comprises three or more stages collectively defining three or more refrigeration stages.

[0038] For these embodiments of the invention, the coldhead comprising one or more stages of the refrigeration system operates in the neck of a thermally isolated container or Dewar. The first stage is the warmest and operates in the neck further from the liquefaction region than the other stages that operate in the neck closer to the liquefaction region. The gas enters at the warm end of the neck and is pre-cooled by the walls of the first stage of the coldhead, by the coldest end of the first stage, further precooled by the walls of the colder stages, and is then condensed at the coldest end of the coldest stage of the coldhead. (For the one-stage embodiment, the condensation occurs at the coldest end of the first stage.) Once condensed or liquefied, the liquid falls to the bottom of the tank, or storage portion, located in the interior of the isolated container. The cooling power that each stage of a closed-cycle cryocooler generates is determined mainly by its temperature, but also depends to second order on the temperature of the previous stages. This information is generally supplied by the cryocooler manufacturer as a two dimensional load map that plots the dependence of the power of the first and second stages versus the temperatures of the first and second stages. Of importance to this invention is that the cooling power available at each stage generally increases with temperature.

[0039] In addition to generating cooling power at the first and subsequent stages, the coldhead also generates cooling power along its entire length, in particular along the surface of the cylindrical cold finger between room temperature and the coldest end of the first stage, and

along the length of the cylindrical cold finger between the first and subsequent stages. It is an object of this invention to optimize the heat exchange between the gas and the various cooling stages, as well as between the gas and the walls of the cylindrical cold finger between the various cooling stages of the cryocooler coldhead. This is achieved by using the high thermal conductivity properties of the gas without the need for mechanical heat exchangers or condensers of any kind that attach to the coldhead, or any radiation screens in the neck, which have generally been considered as essential in previous state-of-the-art systems. Therefore, it is also an object of this invention to extract as much heat from the gas as possible at the highest possible temperature by optimizing the heat transfer between the gas and walls of the cylindrical cold finger between the various cooling stages. This will also reduce the thermal load on the various cooling stages of the cryocooler coldhead, thereby optimizing the thermal efficiency of the precooling and liquefaction process.

[0040] Generally, a multi-stage coldhead is constructed with the upper or first stage having a larger diameter than the lower stages of the coldhead. In this regard, the stages of the cryocooler coldhead are manufactured in a step pattern where the two or more stages have different cross sections. The neck portion of the isolated container can be adapted in various embodiments for receiving the one or more stages of the cryocooler coldhead.

[0041] In one embodiment, the neck portion of the isolated container can include an inner surface adapted to closely match the surface of the one or more stages of the cryocooler coldhead, such that the neck portion comprises a first inner diameter at the first stage and a second inner diameter at the second stage, wherein the first inner diameter is distinct from the second inner diameter. The narrowed volume reduces the heat load down the neck, while the stepped neck improves the exchange process between the gas and the cryocooler, favoring natural convection in the stepped area, at least during the initial cooldown.

[0042] Alternatively, the neck portion can be adapted with a uniform inner diameter extending along a length of the neck portion adjacent to the one or more stages of the cryocooler coldhead. When a straight neck is used, the exchange process is still efficient for initial cooldown and liquefaction. Thus, the present invention can make use of straight or stepped necks inside the container.

[0043] In one embodiment of the invention, the gas pressure control mechanism comprises one or more of the following elements:

an electronically controlled input valve, such as a solenoid valve, which allows the gas flow into the system from the gas intake module;
an absolute pressure regulator, which regulates the pressure of gas flowing from the gas intake module to the interior tank of the thermally isolated container;
a mass flow meter, which measures the gas volume coming from the absolute pressure regulator and entering the interior tank; and
a pressure sensor inside the isolated container, which measures the pressure of the gas inside the interior tank of the isolated container.

[0044] According to this embodiment of the invention, a system of pipes or tubing, valves (manually or electronically controlled), and control mechanisms enables the manipulation of both the pressure and mass flow rate of the gas as it enters the Dewar. The intake gas pressure may differ from the pressure of gas present within the Dewar, or the pressure in the Dewar may need to be adjusted to achieve optimal performance. To avoid rapid pressure changes that greatly disturb equilibrium conditions, the system integrates the aforementioned gas-pressure control mechanisms by means of, for instance, a solenoid valve and a pressure control mechanism. This process regulates the intake pressure as deemed necessary to control the flow of gas from the gas-intake mechanisms to the Dewar.

[0045] Additionally, the system of this invention achieves its precision pressure control through the use of control-mechanisms that regulate the cooling power of the cryocooler's coldhead by adjusting the valves and the mass flow of the gas.

[0046] Furthermore, the control mechanisms receive the necessary data from the system to calculate the level of liquid inside the container, which is needed to perform the necessary adjustments. Additionally, the liquefying processes can be performed under varying pressure ranges starting at slightly above atmospheric pressures and reaching near-critical gas pressure values. All functions and procedures are controllable remotely or in situ, using programmable devices. such as personal computers or an FPGA (Field Programmable Gate Array), with specific control software (such as LabView-based applications), or connected to digital storage hardware in which such software is stored and remotely accessed.

[0047] In another embodiment of the invention, the liquefaction system comprises a transfer port and valve located at the top of the isolated container that allows the extraction of the liquid, resulting from liquefied gas present in the storage portion within the interior tank.

[0048] In one embodiment of the invention, the gas liquefaction method comprises the determination of the level of liquefied gas inside the storage portion of the interior tank from the total mass of the gas contained in the interior tank and the gas and liquid densities determined by measurement of the pressure or temperature at thermodynamic equilibrium. The gas level can be calculated based upon an algorithm involving the mass flow rate, the integrated mass flow rate, the total volume of the inner tank of the container, and the densities of the gas and liquid as determined by the pressure and temperature inside the container.

[0049] In another embodiment of the invention, the gas liquefaction method includes a cleaning mode compris-

ing the steps of:

triggering the input valve to close, preventing the flow of gas into the gas liquefaction system;
determining and maintaining the pressure of the isolated container; and
performing on/off cycles of the refrigeration coldhead, forcing the temperatures of the cryocooler stages to exceed temperatures of fusion and sublimation of impurities present in the interior of the isolated container, making such impurities precipitate and fall into the bottom of the interior tank and thus cleansing the zone where the gas is pre-cooled and liquefied.

[0050] In still another embodiment, the gas liquefaction method includes a stand-by mode, in which the volume of liquefied gas is indefinitely conserved in equilibrium with the vapor, initiated by the control devices, triggering of the intake valve by means of the gas pressure control mechanisms to close the gas intake into the system and obtaining the necessary reduced power by performing start/stop cycles of the coldhead or through the speed control of the coldhead of the cryocooler.

[0051] By the above stand-by mode performing start/stop cycles and cleaning mode, through automatic manipulation of the intake-control mechanisms, one can halt gas liquefaction and maintain the liquid volume constant in the interior tank. The start/stop cycles of the cryocooler coldhead produce temperature cycles in the coldhead that permit the fusion and subsequent precipitation of impurities acquired at the stepped cylinder of the aforementioned coldhead.

[0052] In yet another embodiment, the gas liquefaction method enables direct liquefaction of recovered gas at or slightly above atmospheric pressure, the method comprising:

storing gas in the buffer storage tank at or slightly above atmospheric pressure; and
maintaining the system at or near atmospheric pressure by means of the gas pressure control mechanisms for optimizing liquefaction.

[0053] For the case of helium, when the vapor pressure in the Dewar is in equilibrium with the liquid, the temperature of gaseous and liquid helium is solely defined by the equilibrium vapor-pressure curve. Of significance to this invention is that the temperature of helium increases with pressure along the vapor-pressure curve. In the case of helium, both pressure and temperature increase from the triple point of helium (at an absolute pressure of 0.051 bar and a temperature of 2.17 K) to the critical point of helium, which occurs at the critical pressure, P_c, of 2.27 bar absolute and critical temperature, T_c, of 5.19 K. Normally with no applied load, the lowest temperature reached by closed cycle cryocoolers is about 3 K for which the vapor pressure of helium is about 0.5 bar. Therefore, a practical range over which the capabilities of closed-cycle cryocooler systems and the helium vapor-pressure curve overlap is from about 0.5 bar at 3 K to 2.27 bar at 5.19 K. Accordingly, the refrigeration system can also perform at the intermediate point at atmospheric pressure and at a temperature of 4.23 K.

[0054] In another embodiment of the gas liquefaction method of the present invention, the gas pressure control mechanisms, the gas intake module, and the control devices are governed by means of a software program in at least one digital data storage means.

[0055] In another embodiment, the digital data storage means is connected to a programmable device in charge of executing the software program.

[0056] In another general embodiment, a method for liquefaction of gas is provided in conjunction with the described systems. The method comprises:

(i) providing at least: a source containing an amount of gas-phase cryogen; a Dewar having a liquefaction region defined by a storage portion and a neck portion extending therefrom; a cryocooler at least partially disposed within the neck portion, the cryocooler being adapted to condense cryogen contained within the liquefaction region from a gas-phase to a liquid phase; and a pressure control mechanism, the pressure control mechanism comprising at least a pressure sensor, a mass flow meter, and one or more valves;
(ii) measuring vapor pressure within said liquefaction region of said Dewar using said pressure sensor;
(iii) maintaining said vapor pressure within said liquefaction region within an operating range by dynamically controlling an input gas flow about the liquefaction region; and
(iv) regulating the input gas flow about the liquefaction region using the pressure control mechanism.

[0057] In certain embodiments, the method may further comprise the step of processing data on a computer for dynamic control of the cryostat, wherein the data includes at least one of: the measured vapor pressure; and a rate of the input gas flow.

[0058] Although helium is extensively discussed in the representative embodiments, it should be recognized that other cryogens may be utilized in a similar manner including, without limitation: nitrogen, oxygen, hydrogen, neon, and other gases.

[0059] Furthermore, it should be recognized that although depicted as a distinct unit in several descriptive embodiments herein, the components of the control mechanism can be individually located near other system components and adapted to effectuate a similar liquefaction process. For example, the pressure regulator can be attached to the gas storage source or otherwise positioned anywhere between the storage source and liquefaction region of the cryostat system. Alternatively, the source can be fitted with a compressor for supplying an

input gas at a desired pressure. Such a system would not necessarily require a pressure regulator within the pressure control mechanism. It should be recognized that various modified configurations of the described system can be achieved such that similar results may be obtained. Accordingly, the pressure control mechanism is intended to include a collection of components in direct attachment or otherwise collectively provided within the system for dynamically controlling input gas flow, and thus pressure within the liquefaction region of the cryostat.

[0060] Now turning to the drawings, Fig.1 illustrates a general phase diagram of helium 4. The range of operation for general closed cycle cryocooler coldheads is between about 3.0 K and about 5.2 K and between about 0.25 bar and about 2.27 bar. In reference to the liquefaction curve of Fib.1, Z_1 represents a point at which helium gas is liquefied at atmosphere, and the liquefaction temperature is about 4.2 K, as is the current state of the art for small scale liquefiers. Z_2 represents a point on the liquefaction curve at which helium gas is liquefied just below the critical point where the liquid and gas are in equilibrium. The pressure at Z_2 is near the critical pressure Pc (here about 2.2 bar), and the liquefaction temperature at Z_2 is about 5.2 K. It is at this point (Z_2) where the present liquefaction system is intended to operate and is preferably operated during a typical helium gas liquefaction process.

[0061] The optimal liquefaction pressure is slightly below the critical pressure, that is, 2.1 bar for the case of helium, a pressure for which rates can reach and surpass 65 liters/day at 2.1 bar (260 g/h), equivalent to 50 liters/day at 1 bar, with efficiencies equal to or even greater than 7 liters/day/kW.

[0062] Fig. 2 represents a load map, which defines the characteristics of a typical cryocooler coldhead 18 (see Fig. 3) operating at 50 Hz and using 7.5 kW of power. The load map defines the unique relationship between a set of paired points (T_1, T_2) and (P_1, P_2), where T_1 is the temperature of the coldest end of the first stage, T_2 is the temperature of the coldest end of the second stage, P_1 is the power of first stage 10, and P_2 is the power of second stage 11. The measured point (0 W, 0 W) maps to the point (3 K, 24 K), which indicates that the lowest temperatures achieved with no load applied to either of the two stages of this cryocooler are about 3 K on the second stage and 24 K on the first stage. The measured point (5 W, 40 W) maps to the point (6.2 K, 45 K) and shows that if 5 W of power is applied to the second stage and 40W of power is applied to the first stage, then the second stage will operate at about 6.2 K and the first stage at about 45 K. The measured load map points are connected by lines to interpolate intermediate points.

[0063] An efficient helium gas liquefaction cycle is also shown on the load map as the continuous line cycle connecting points (a), (b), and (c). The points are determined by the temperature (or pressure) of the helium and are plotted versus the temperature T_2 of the second stage. Point (a) is at a temperature (T_2) of about 4.3 K, which corresponds to a pressure of about 1.08 bar, which is slightly above atmospheric pressure at 1.0 bar. At point (a) the liquefaction rate is about 20 liters/day. Point (b) is close to the critical point and is at a temperature T_2 of 5.1 K, which corresponds to a pressure of 2.1 bar. Point (b) is where the maximum liquefaction efficiency occurs and normally the system is maintained at point (b) until the volume of the interior tank is completely filled with liquid helium. At point (b), the liquefaction rate is about 65 liters/day (260 g/hr), which is equivalent to 50 liters/day at 1.0 bar. The trajectory shown joining point (a) to point (b) is one the most efficient paths to follow between these two points while maintaining quasi-equilibrium conditions.

[0064] Point (c) is at about 4.2 K (T_2) at atmospheric pressure, the pressure that the system is normally returned to before transferring liquid out of the Dewar and into scientific or medical equipment. The trajectory shown joining point (b) and point (c) is one of the most efficient trajectories taken between these two points. Not only is the pressure being decreased in the interior tank, but since the density of liquid increases between these two points, the volume of the liquid contracts and therefore liquefaction must continue along this trajectory to keep the interior tank filled with liquid when it reaches point (c).

[0065] The gas liquefaction system can also operate over a much wider range than the trajectory defined by points (a), (b), and (c). An example of the total working area of the liquefier is depicted as an area enclosed by dashed lines in Fig. 2. The lower left region of this working area includes the liquefaction of helium gas for pressures less than 1 atmosphere, where T_2, the temperature of the coldest end of the second stage, is under 4.2K and the liquefaction rates in turn are about 17 liters/day. This region is appropriate for MRI equipment and other equipment that must operate under these conditions. At the upper right region of the working area, it is shown that the liquefier can operate above the critical point, where it fills the interior tank only with dense helium gas. Other efficient trajectories include, for example, the case where point (c) matches point (a), defining a closed cycle comprised by the trajectory points (a), (b), (a).

[0066] Fig. 3 illustrates a schematic of the general gas liquefaction system 1 according to various embodiments of the invention. The system is supplied primarily with gas through gas intake module 2, preferably with recovered gas, of 99% purity or higher in the case of helium, although it can operate with lower purity grades if necessary. The system of Fig. 3 illustrates two helium gas sources 25, a first source is directly connected to the gas intake module, and a second source further comprises buffer storage tank 24 for operation with sensitive MRI and other equipment. The gas is liquefied in interior tank 9 of thermally isolated vacuum flask or container 8, such as a Dewar or a thermos container. The liquefaction process comprises controlling the gas pressure in the interior tank, while the gas is cooled and condensed by one or

more cryocooler coldheads 18 comprised of closed-cycle cryocoolers of one or more stages, placed in one or more necks 20 of the interior tank of the isolated container.

[0067] Although in principle the present invention allows the use of any multi-stage cryocooler, the following description is directed to an embodiment comprising a coldhead with two refrigeration stages. Nonetheless, it should be apparent to the person skilled in the art that the application to other types of coldheads (equipped with one, two, or more refrigeration stages) is analogously achievable with equivalent increase in the liquefaction rates.

[0068] In Fig. 3, cryocooler coldhead 18 has two cold stages defined by a step pattern, with the cylindrical diameter of first stage 10 being larger than the diameter of second stage 11. In the case of helium, the high thermal conductivity of the gas and the convection currents generated by thermal gradients in the direction of the gravity force provides extremely efficient heat exchange between the two stages of the coldhead and the gas, and eliminates the need for mechanical heat exchangers, condensers, and radiation screens. Convection currents are of importance only during the first cool down, since after the bottom of interior tank 9 becomes cooled, helium is stratified in temperature and the gradient is always opposite to the gravity force. Temperature sensors are used to measure the vapor temperature T_{S1} at the lower end of first stage 10, the vapor temperature T_{S2} at the lower end of second stage 11, and the vapor or liquid temperature T_{S3} at the bottom of interior tank 9. After condensing, the liquid descends into and fills the storage portion of the interior tank. The liquid is transferred out of the interior tank, either manually or automatically, via transfer valve or port 6 when needed. Means of connection 17 on the coldhead are used to connect to refrigeration compressor 22, via which compressed gas is supplied to and returned from coldhead 18 via compressor hoses 21 and electrical power via compressor power cable 22A.

[0069] Gas pressure control mechanism 19 maintains control over the input flow of the gas to control the pressure inside interior tank 9. The gas pressure control mechanism measures the pressure of the interior tank using pressure sensor 7 and controls the flow rate of the gas going to the container using input valve 3 (preferably a solenoid valve), pressure regulator 4, and various flow-control input valves, preferably electronic solenoid valves or manual valves 12, 13, 14, 15, 16. Gas mass flow meter 5 measures the instantaneous flow rate, which is modulated by gas pressure regulator 4 as it controls the pressure. The integrated gas flow, pressure, and temperature are used to calculate the total amount of gas as well as the level of liquid accumulated within the interior tank of isolated container 9. Gas pressure control mechanism 19 can halt the gas input if the pressure of the helium supply is insufficient, and can switch the system into stand-by mode to maintain the mass of the liquefied gas. The mass flow of the gas going to the isolated container, and consequently the liquefaction rate, will increase as the power available for condensation on last stage 11 of coldhead 18 of the cryocooler increases. Since helium is stratified with the same temperature profile as the coldhead, thermal exchange between the gas and the coldhead is optimal.

[0070] Computer control device 23, comprising at least a computer equipped with programmed software/hardware and a monitor, controls the performance of the system by means of gas pressure control mechanism 19, refrigeration coldhead 18, cryocooler compressor 22, temperature sensors, and optional level indicators inside the interior tank.

[0071] The liquefaction process comprises introducing into interior tank 9 the mass of gas equivalent to 100% of its volume and maintaining it as close as possible to atmospheric pressure or to the pressure of the chosen application for the liquid in the shortest possible time. To achieve this, the maximum power must be extracted from the gas by the coldhead of the cryocooler 18 during the entire process. This is to say, the trajectory that the process describes on the cryocooler coldhead load map is ideally the most efficient one.

[0072] In another embodiment of the invention, gas liquefaction system 1 is configured for the recovery of helium in MRI machines. For added security, the gas recovery system may include an additional manual safety valve that is located between the MRI machine and small buffer storage tank 24, preferably metallic, which is placed immediately before the entry of gases. The function of such a buffer storage tank or external container is to establish a small gas reserve in which the pressure can be adjusted to perform at or near atmospheric pressures, always within the specific range of the MRI machines. Additionally, vertical access port 6 can be located on one of the sides of the top part of the Dewar for transferring the liquid helium from the liquefier to the scientific or medical MRI equipment. This can either be configured to insert a simple transfer tube, or it may be configured with a cryogenic valve.

[0073] The condensation process of the cold vapor accumulating as liquid in interior tank 9 corresponds to an isobaric process during which any disturbance in pressure yields a diminished liquefaction rate. For gas liquefaction system 1 to perform at optimum efficiency, it is therefore necessary to perform precise pressure control of interior tank 9 using electronic control of the diverse gas pressure control mechanism 19, and maintain the control throughout the entire process.

[0074] It has been observed that the highest liquefaction rates can only be obtained with a gas purity of 99.99% or better, while lower purity gas significantly degrades the liquefaction performance. In addition, after contamination with impure gas, the system shows no improvement in the liquefaction rate when the input gas is returned to 99.99% purity or better. However, the standby mode can also be used to clean the surfaces of the coldhead and to restore efficiency. When the temperatures

of the first stage and the second stage are set high enough to produce fusion and sublimation of any impurities, the system undergoes a process of regeneration, or cleaning, without loss of gas. After a set of several such standby-mode cycles, the liquefaction rate increases again to values characteristic of liquefying high purity gas. During liquid transfer operations, the same purge or regeneration effect is reproduced, due to the temperature increase (over 100 K) of both the first stage and the second stage of the refrigeration coldhead.

[0075] Figs. 4 and 5 further illustrate a system for liquefaction of cryogen according to various embodiments of the invention. System 101 includes vacuum isolated container 102 having storage portion or tank 103 and neck portion 104 extending from the storage portion, a coldhead cryocooler 105 at least partially received within the neck portion, and liquefaction region 106 defined by a volume of space generally disposed between the storage portion and neck portion adjacent to the coldhead as is further depicted by the dashed area of Fig. 5. The coldhead includes N coldhead stages represented as first stage 107, second stage 108, third stage 109, and Nth stage 110. In the system of Fig. 5, the neck portion is a straight neck. However as noted by dashed lines in Fig. 4, the neck can optionally be adapted to geometrically conform to the surface of the coldhead stages. Cooling gas convection paths 111 are further depicted in Fig. 4. The system is adapted for improved liquefaction of cryogen by controlling pressure within the liquefaction region of the cryostat. Pressure control mechanism 114 includes electronic pressure controller 112 and mass flow meter 113 for controlling input gas flowing into the cryostat such that pressure within the liquefaction region is optimized for improved liquefaction. Extraction port 115 provides access to the liquefied cryogen.

[0076] In certain embodiments of the invention, a method for improved liquefaction of cryogen, such as helium, includes:

providing a cryostat including a vacuum isolated container having a storage portion and at least one neck portion extending therefrom, a coldhead cryocooler at least partially received within the neck portion, and a liquefaction region defined by a volume of space disposed between the storage portion and neck portion adjacent to the coldhead;
providing a pressure control mechanism for maintaining a desired pressure about the liquefaction region of the cryostat, wherein the desired pressure is substantially uniform about the liquefaction region; and
controlling pressure within the liquefaction region during a liquefaction process such that the liquefaction of cryogen can be accomplished at slightly higher temperatures where the cryocooler is configured to operate at an increased cooling power.

Claims

1. A gas liquefaction system (1) for liquefying gas comprising:

   a gas intake module (2) adapted to be connected to a gas source and configured to provide gas to the system;
   a thermally isolated container (8)
   at least one interior tank (9) in the container (8) having at least one neck (20) extending therefrom;
   at least one refrigeration coldhead (18) having a coldfinger portion located inside the neck and routed toward the interior tank;
   a gas compressor (22) configured to provide compressed gas to the refrigeration coldhead for the operation of the cryocooler;
   characterized in that:

   at least one gas pressure control mechanism (19) configured to control the gas intake pressure flowing from the gas intake module (2) and to adjust such pressure to the required elevated gas pressure inside the interior tank; (9) and
   at least one control device (23) for controlling the liquefaction performance of the system, said at least one gas pressure control mechanism (19) and said at least one control device (23) being configured to optimize liquefaction performance and increase liquefaction rate by controlling gas flow into the interior tank (9) to maintain pressure inside the interior (9) just below the critical pressure of the gas being liquefied and
   at least one transfer port (6) is in fluid communication with the interior tank (9) and is adapted to enable extraction of liquefied cryogen therefrom.

2. The gas liquefaction system according to claim 1, **characterized in that** the at least one refrigeration coldhead routed toward the interior tanlc comprises, one, two, or more stages (107, 108, 109, 110) each having a distinct cross section.

3. The gas liquefaction system according to claim 2, **characterized in that** the neck of the interior tank has a step pattern according to the geometry of the stages (107, 108, 109, 110) of the refrigeration coldhead.

4. The gas liquefaction system according to any one of claims 1-3, **characterized in that** the gas pressure control mechanism (19) comprises one or more of the following elements:

an electronically controlled input valve (3), which controls the gas flow into the interior tank;
a pressure regulator (4) which regulates the pressure of the gas flowing from the gas intake module to the interior tank;
a mass flow meter (5) which measures the gas volume coming from the pressure regulator and entering the interior tank; and
a pressure sensor (7) which measures the pressure of the gas inside the interior tank.

5. The gas liquefaction system according to any one of claims 1-4, and further comprising valves (12, 13, 14, 15, 16) configured to control the passage of gas through the pressure control mechanism.

6. The gas liquefaction system according to any one of claims 1-5, **characterized in that** the gas is helium.

7. A gas liquefaction method that makes use of a gas liquefaction system (1) according to any of claims 1-6, which comprises the following steps:

supplying gas to the gas liquefaction system (1) through the gas intake module (2); regulating pressure of gas entering the interior tank (9) by means of the gas control mechanism (19) and the control devices (23);
regulating the power of the refrigeration coldhead (18) by means of the control devices (23) to determine the rate of liquefaction;
controlling the rate of pressure changes of the incoming gas in the interior tank (9) by means of the gas pressure control mechanism (19) to optimize the liquefaction rate inside the interior tank (9) both during and after pressure changes; and
regulating the pressure of the gas present in the interior tank (9) to a constant determined value above atmospheric pressure to set the desired liquefaction rate.

8. The gas liquefaction method according to claim 7, and further comprising the determination of the level of liquefied gas inside the interior tank (9) from the total mass of the gas in the interior tank (9) and/or the determination of the gas and liquid densities by measuring the pressure or temperature at thermodynamic equilibrium.

9. The gas liquefaction method according to claim 7 or 8, and further comprising the steps of:

triggering an input valve (3) to close, preventing the flow of gas into the system; determining and maintaining the pressure in the interior tank (9); and
performing on/off cycles of the refrigeration coldhead, forcing the temperatures of refrigeration coldhead stages (10,11) to exceed temperatures of fusion and sublimation of impurities present in the interior of the interior tank (9), making such impurities precipitate and fall into the bottom of the interior tank (9) and thus cleansing the zone where the gas is pre-cooled and liquefied.

10. The gas liquefaction method according to any one of claims 7-9, and further comprising a stand-by mode in which the volume of liquefied gas is indefinitely conserved in equilibrium with the vapor, the standby mode being initiated by the control devices (23) triggering of the input valve (3) by means of the gas pressure control mechanism (19) to close the gas intake into the gas liquefaction system.

11. The gas liquefaction method according to any one of claims 7-10, including direct liquefaction of recovered gas above atmospheric pressure, comprising:

storage of gas in a buffer storage tank (24) prior to its passage through the gas intake module (2) above atmospheric pressure; and
direct liquefaction, maintaining the gas liquefaction system at a pressure above atmospheric pressure by means of the gas pressure control mechanism (19).

12. The gas liquefaction method according to any one of claims 7-11, **characterized in that** the gas pressure control mechanism (19), the gas intake module (2), and the control devices (23) are governed by means of a software program in at least one data storage means.

13. The gas liquefaction method according to claim 12, **characterized in that** the data storage means is connected to a programmable device in charge of executing said software program.

14. The gas liquefaction method according to any of claims 7-13, **characterized in that** said gas is selected from the group consisting of: helium, nitrogen, oxygen, hydrogen, and neon.

Patentansprüche

1. Gasverflüssigungssystem (1) zum Verflüssigen von Gas, welches aufweist:

ein Gaseinlassmodul (2), welches dafür ausgelegt ist, mit einer Gasquelle verbunden zu sein und eingerichtet ist, um dem System Gas zur Verfügung zu stellen,
einen thermisch isolierten Container (8),

mindestens einen Innentank (9) in dem Container (8), welcher mindestens einen Hals (20) hat, welcher sich von dem Innentank erstreckt,
mindestens einen Kühlkaltkopf (18), mit einem Kühlfingerabschnitt, welcher innerhalb des Halses angeordnet und in Richtung des Innentanks geführt ist,
einen Gaskompressor (22), welcher dafür ausgelegt ist, dem Kühlkaltkopf komprimiertes Gas für den Betrieb des Kryokühlers zur Verfügung zu stellen,
dadurch gekennzeichnet, dass
mindestens ein Gasdrucksteuerungsmechanismus (19), welcher dafür ausgelegt ist, den Gaseinlassdruck, welcher von dem Gaseinlassmodul (2) strömt, zu steuern und diesen Druck an den benötigten erhöhten Gasdruck im Innern des Innentanks (9) anzupassen, und
mindestens eine Steuereinrichtung (23) zum Steuern der Verflüssigungsleistung des Systems, wobei der mindestens eine Gasdrucksteuerungsmechanismus (19) und die mindestens eine Steuereinrichtung (23) dafür ausgelegt sind, die Verflüssigungsleistung zu optimieren und die Verflüssigungsrate durch Steuern des Gasflusses in den Innentank (9) zu erhöhen, um den Druck im Innern des Innentanks (9) knapp unterhalb des kritischen Drucks des zu verflüssigenden Gases zu halten, und
wobei mindestens ein Überströmanschluss (6) in Strömungsverbindung mit dem Innentank (9) steht und dafür ausgelegt ist, die Entnahme von verflüssigtem Kühlmittel daraus zu ermöglichen.

2. Gasverflüssigungssystem nach Anspruch 1, **dadurch gekennzeichnet, dass** der mindestens eine Kühlkaltkopf, welcher in Richtung des Innentanks geführt ist, einen, zwei oder mehr Abschnitte (107, 108, 109, 110) aufweist, welche jeweils einen anderen Querschnitt aufweisen.

3. Gasverflüssigungssystem nach Anspruch 2, **dadurch gekennzeichnet, dass** der Hals des Innentanks einen Stufenverlauf entsprechend der Geometrie der Abschnitte (107, 108, 109, 110) des Kühlkaltkopfs hat.

4. Gasverflüssigungssystem nach einem der Ansprüche 1-3, **dadurch gekennzeichnet, dass** der Gasdrucksteuerungsmechanismus (19) eines oder mehrere der folgenden Elemente aufweist:

ein elektronisch gesteuertes Eingangsventil (3), welches den Gasfluss in den Innentank kontrolliert,
einen Druckregulator (4), welcher den Druck des Gases, welches von dem Gaseinlassmodul zu dem Innentank strömt, reguliert,
einen Massendurchflussmesser (5), welcher das Gasvolumen, welches von dem Druckregulator kommt und in den Innentank eintritt, misst, und
einen Drucksensor (7), welcher den Druck des Gases im Innern des Innentanks misst.

5. Gasverflüssigungssystem nach einem der Ansprüche 1-4, und welches weiterhin Ventile (12, 13, 14, 15, 16) aufweist, welche dafür eingerichtet sind, den Durchfluss von Gas durch den Drucksteuerungsmechanismus zu steuern.

6. Gasverflüssigungssystem nach einem der Ansprüche 1-5, **dadurch gekennzeichnet, dass** das Gas Helium ist.

7. Gasverflüssigungsverfahren, welches ein Gasverflüssigungssystem (1) nach einem der Ansprüche 1-6 verwendet, welches die folgenden Schritte aufweist:

Zuführen von Gas zu dem Gasverflüssigungssystem (1) durch das Gaseinlassmodul (2), Regulieren des Drucks von Gas, welches in den Innentank (9) strömt, mit Hilfe des Gassteuerungsmechanismus (19) und der Steuereinrichtungen (23),
Regulieren der Leistung des Kühlkaltkopfs (18) mit Hilfe der Steuereinrichtungen (23), um die Verflüssigungsrate zu bestimmen,
Steuern der Geschwindigkeit von Druckänderungen des einströmenden Gases in dem Innentank (9) mit Hilfe des Gasdrucksteuerungsmechanismus (19), um die Verflüssigungsrate im Innern des Innentanks (9) sowohl während als auch nach Druckänderungen zu optimieren, und
Regulieren des Druckes des in dem Innentank (9) vorhandenen Gases auf einen konstanten bestimmten Wert oberhalb Atmosphärendrucks, um die gewünschte Verflüssigungsrate festzulegen.

8. Gasverflüssigungsverfahren nach Anspruch 7, und weiterhin aufweisend das Bestimmen der Konzentration von verflüssigtem Gas im Innern des Innentanks (9) aus der Gesamtmenge an Gas in dem Innentank (9) und/oder Bestimmen der Gas- und Flüssigkeitsdichten durch Messen des Druckes oder der Temperatur bei thermodynamischem Gleichgewicht.

9. Gasverflüssigungsverfahren nach Anspruch 7 oder 8, und weiterhin aufweisend die Schritte:

Veranlassen, dass ein Eingangsventil (3) sich schließt, Verhindern des Gasflusses in das Sys-

tem, Bestimmen und Aufrechterhalten des Druckes in dem Innentank (9), und
Durchführen von An-/Aus-Zyklen des Kühlkaltkopfs, Veranlassen, dass die Temperaturen der Kühlkaltkopfabschnitte (10, 11) Schmelzpunkte und Sublimationspunkte von Verunreinigungen, welche im Innern des Innentanks (9) vorliegen, überschreiten, Veranlassen, dass solche Verunreinigungen ausgefällt werden und auf den Boden des Innentanks (9) absinken und dadurch Reinigen des Bereichs, wo das Gas vorgekühlt und verflüssigt wird.

10. Gasverflüssigungsverfahren nach einem der Ansprüche 7-9, und weiterhin aufweisend einen Standby-Modus, in welchem das Volumen von verflüssigtem Gas in unbestimmtem Gleichgewicht mit dem Dampf gehalten wird, wobei der Standby-Modus durch die Steuerungsvorrichtungen (23) ausgelöst wird, welche das Eingangsventil (3) mit Hilfe des Gasdrucksteuerungsmechanismus (19) dazu veranlassen, den Gaseinlass in das Gasverflüssigungssystem zu schließen.

11. Gasverflüssigungsverfahren nach einem der Ansprüche 7-10, einschließlich der direkten Verflüssigung von rückgewonnenem Gas oberhalb des Atmosphärendrucks, welches aufweist:

Speichern von Gas in einem Pufferspeichertank (24) bevor es oberhalb des Atmosphärendrucks durch das Gaseinlassmodul (2) geleitet wird, und
direkte Verflüssigung, Halten des Gasverflüssigungssystems auf einem Druck oberhalb Atmosphärendrucks mit Hilfe des Gasdrucksteuerungsmechanismus' (19).

12. Gasverflüssigungsverfahren nach einem der Ansprüche 7-11, **dadurch gekennzeichnet, dass** der Gasdrucksteuerungsmechanismus (19), das Gaseinlassmodul (2) und die Steuereinrichtungen (23) mit Hilfe eines Softwareprogramms in mindestens einem Datenspeichermedium gesteuert werden.

13. Gasverflüssigungsverfahren nach Anspruch 12, **dadurch gekennzeichnet, dass** das Datenspeichermedium mit einer programmierbaren Vorrichtung verbunden ist, welche dazu dient, das Softwareprogramm auszuführen.

14. Gasverflüssigungsverfahren nach einem der Ansprüche 7-13, **dadurch gekennzeichnet, dass** das Gas ausgewählt ist aus der Gruppe bestehend aus: Helium, Stickstoff, Sauerstoff, Wasserstoff und Neon.

Revendications

1. Système de liquéfaction de gaz (1) pour liquéfier du gaz, comprenant :

un module d'admission de gaz (2) adapté pour être raccordé à une source de gaz et configuré pour fournir du gaz au système ;
un conteneur isolé thermiquement (8) ;
au moins un réservoir intérieur (9) dans le conteneur (8) pourvu d'au moins un goulot (20) s'étendant à partir de celui-ci ;
au moins une tête froide de réfrigération (18) ayant une partie formant doigt froid située à l'intérieur du goulot et dirigée vers le réservoir intérieur ;
un compresseur de gaz (22) configuré pour fournir du gaz comprimé à la tête froide de réfrigération pour le fonctionnement du cryoréfrigérateur ;
caractérisé par :

au moins un mécanisme de commande de pression de gaz (19) configuré pour commander la pression d'admission du gaz s'écoulant du module d'admission de gaz (2) et pour régler cette pression à la pression de gaz élevée requise à l'intérieur du réservoir intérieur (9), et
au moins un dispositif de commande (23) pour commander la performance de liquéfaction du système, ledit au moins un mécanisme de commande de pression de gaz (19) et ledit au moins un dispositif de commande (23) étant configurés pour optimiser la performance de liquéfaction et augmenter la vitesse de liquéfaction en commandant le débit de gaz dans le réservoir intérieur (9) pour maintenir la pression à l'intérieur du réservoir intérieur (9) juste au-dessous de la pression critique du gaz en cours de liquéfaction, et
au moins un orifice de transfert (6) est en communication fluidique avec le réservoir intérieur (9) et est adapté pour permettre l'extraction de cryogène liquéfié de celui-ci.

2. Système de liquéfaction de gaz selon la revendication 1, **caractérisé en ce que** la au moins une tête froide de réfrigération dirigée vers le réservoir intérieur comprend un, deux ou plus de deux étages (107, 108, 109, 110), chacun de section transversale différente.

3. Système de liquéfaction de gaz selon la revendication 2, **caractérisé en ce que** le goulot du réservoir intérieur a une configuration en gradins selon la géométrie des étages (107, 108, 109, 110) de la tête

froide de réfrigération.

4. Système de liquéfaction de gaz selon l'une quelconque des revendications 1 à 3, **caractérisé en ce que** le mécanisme de commande de pression de gaz (19) comprend un ou plusieurs des éléments suivants :

une soupape d'admission (3) à commande électronique, qui commande le débit de gaz dans le réservoir intérieur ;
un régulateur de pression (4) qui régule la pression du gaz s'écoulant du module d'admission de gaz vers le réservoir intérieur ;
un débitmètre massique (5) qui mesure le volume de gaz provenant du régulateur de pression et entrant dans le réservoir intérieur ; et
un capteur de pression (7) qui mesure la pression du gaz à l'intérieur du réservoir intérieur.

5. Système de liquéfaction de gaz selon l'une quelconque des revendications 1 à 4, et comprenant, en outre, des soupapes (12, 13, 14, 15, 16) configurées pour commander le passage du gaz à travers le mécanisme de commande de pression.

6. Système de liquéfaction de gaz selon l'une quelconque des revendications 1 à 5, **caractérisé en ce que** le gaz est de l'hélium.

7. Procédé de liquéfaction de gaz utilisant un système de liquéfaction de gaz (1) selon l'une quelconque des revendications 1 à 6, comprenant les étapes suivantes :

alimenter en gaz le système de liquéfaction de gaz (1) via le module d'admission de gaz (2) ;
réguler la pression du gaz entrant dans le réservoir intérieur (9) au moyen du mécanisme de commande de gaz (19) et des dispositifs de commande (23) ;
réguler la puissance de la tête froide de réfrigération (18) au moyen des dispositifs de commande (23) pour déterminer la vitesse de liquéfaction ;
commander la vitesse des variations de pression du gaz entrant dans le réservoir intérieur (9) au moyen du mécanisme de commande de pression de gaz (19) pour optimiser la vitesse de liquéfaction à l'intérieur du réservoir intérieur (9) pendant et après les variations de pression ; et
réguler la pression du gaz présent dans le réservoir intérieur (9) à une valeur déterminée constante au-dessus de la pression atmosphérique pour régler la vitesse de liquéfaction désirée.

8. Procédé de liquéfaction de gaz selon la revendication 7, comprenant, en outre, la détermination du niveau de gaz liquéfié à l'intérieur du réservoir intérieur (9) à partir de la masse totale du gaz dans le réservoir intérieur (9) et/ou la détermination des densités de gaz et de liquide en mesurant la pression ou la température à l'équilibre thermodynamique.

9. Procédé de liquéfaction de gaz selon la revendication 7 ou 8, comprenant, en outre, les étapes suivantes :

déclencher la fermeture d'une soupape d'admission (3), empêchant ainsi l'écoulement de gaz dans le système ; déterminer et maintenir la pression dans le réservoir intérieur (9) ; et
exécuter des cycles de marche/arrêt de la tête froide de réfrigération, forçant les températures des étages (10, 11) de la tête froide de réfrigération à dépasser les températures de fusion et de sublimation des impuretés présentes à l'intérieur du réservoir intérieur (9), provoquant la précipitation des impuretés qui tombent au fond du réservoir intérieur (9) et nettoyant ainsi la zone où le gaz est pré-refroidi et liquéfié.

10. Procédé de liquéfaction de gaz selon l'une quelconque des revendications 7 à 9, comprenant, en outre, un mode 'veille' dans lequel le volume de gaz liquéfié est conservé indéfiniment en équilibre avec la vapeur, le mode 'veille' étant initié par les dispositifs de commande (23) déclenchant la soupape d'admission (3) au moyen du mécanisme de commande de pression de gaz (19) pour fermer l'admission de gaz dans le système de liquéfaction de gaz.

11. Procédé de liquéfaction de gaz selon l'une quelconque des revendications 7 à 10, incluant la liquéfaction directe de gaz récupéré au-dessus de la pression atmosphérique, comprenant:

le stockage de gaz dans un réservoir de stockage tampon (24) avant son passage à travers le module d'admission de gaz (2) au-dessus de la pression atmosphérique ; et
la liquéfaction directe, maintenant le système de liquéfaction de gaz à une pression supérieure à la pression atmosphérique au moyen du mécanisme de commande de pression de gaz (19).

12. Procédé de liquéfaction de gaz selon l'une quelconque des revendications 7 à 11, **caractérisé en ce que** le mécanisme de commande de pression de gaz (19), le module d'admission de gaz (2) et les dispositifs de commande (23) sont gérés moyen d'un programme logiciel dans au moins un moyen de stockage de données.

13. Procédé de liquéfaction de gaz selon la revendica-

tion 12, **caractérisé en ce que** le moyen de stockage de données est relié à un dispositif programmable chargé d'exécuter ledit programme logiciel.

14. Procédé de liquéfaction de gaz selon l'une quelconque des revendications 7 à 13, **caractérisé en ce que** ledit gaz est choisi dans le groupe comprenant : hélium, azote, oxygène, hydrogène et néon.

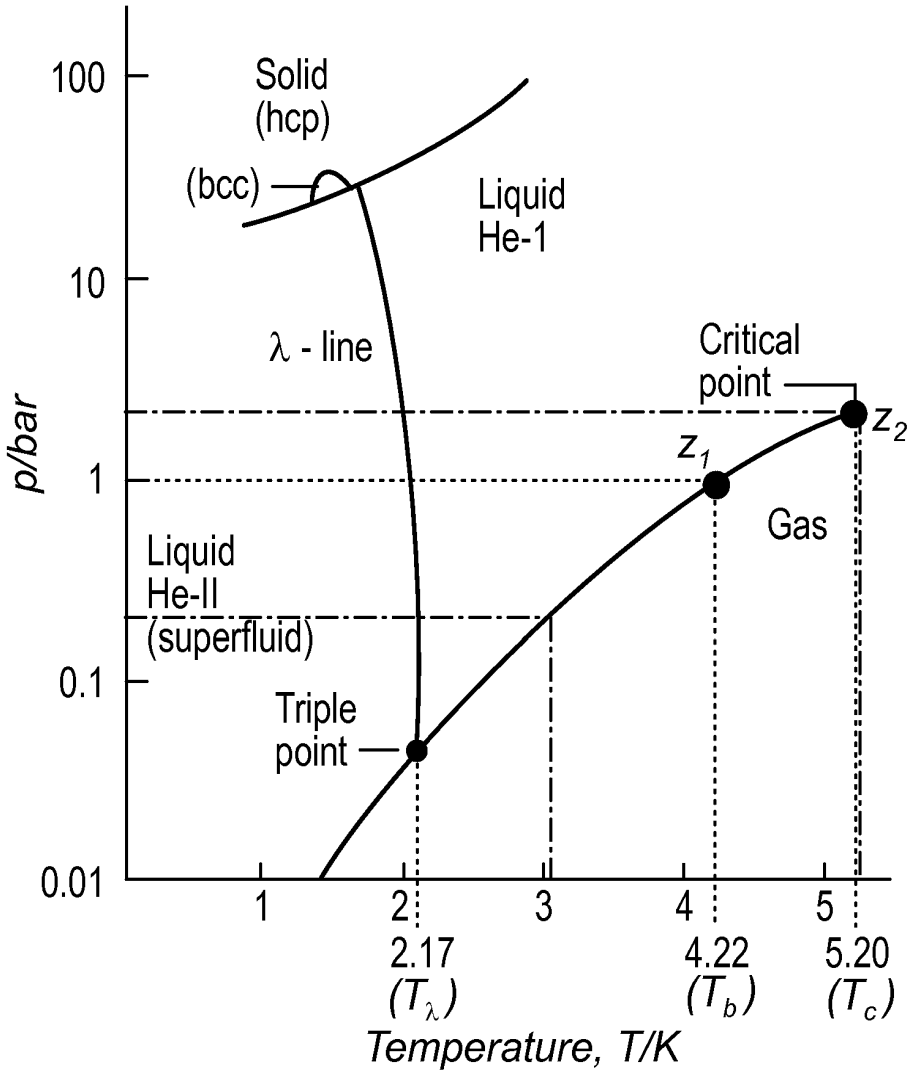
100
10
1
0.1
0.01
p/bar
Solid
(hcp)
(bcc)
Liquid
He-1
λ - line
Critical
point
z_2
z_1
Gas
Liquid
He-II
(superfluid)
Triple
point
1
2
3
4
5
2.17
(T_λ)
4.22
(T_b)
5.20
(T_c)
Temperature, T/K

Fig. 1

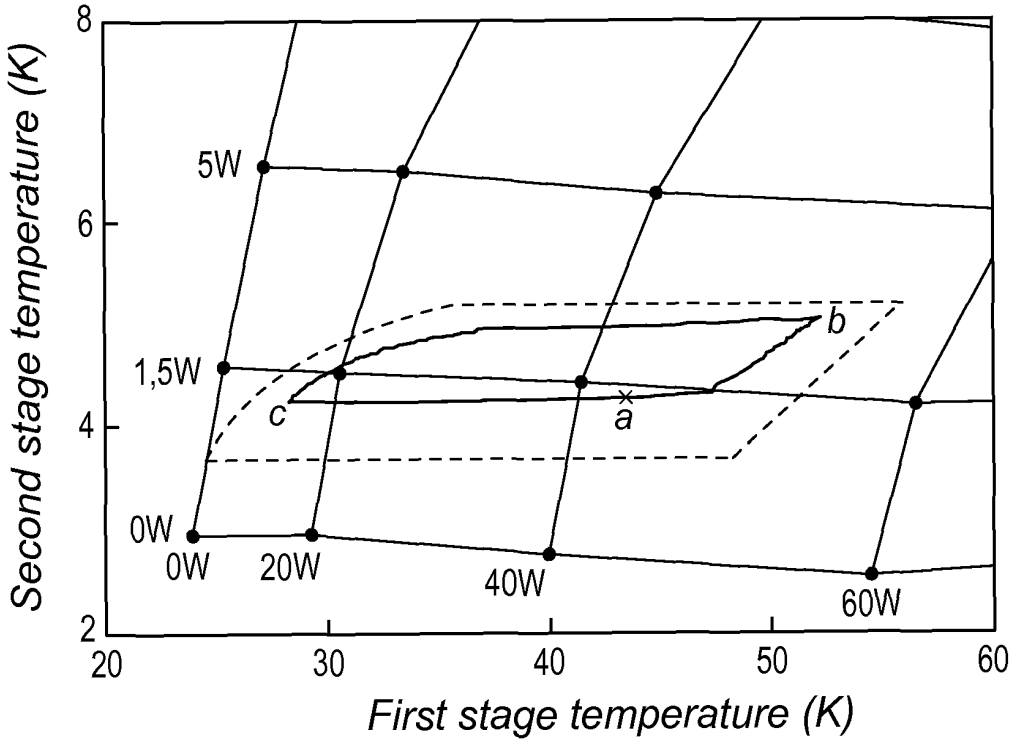
Second stage temperature (K)
First stage temperature (K)
8
6
4
2
20
30
40
50
60
5W
1,5W
0W
0W
20W
40W
60W
a
b
c

Fig. 2

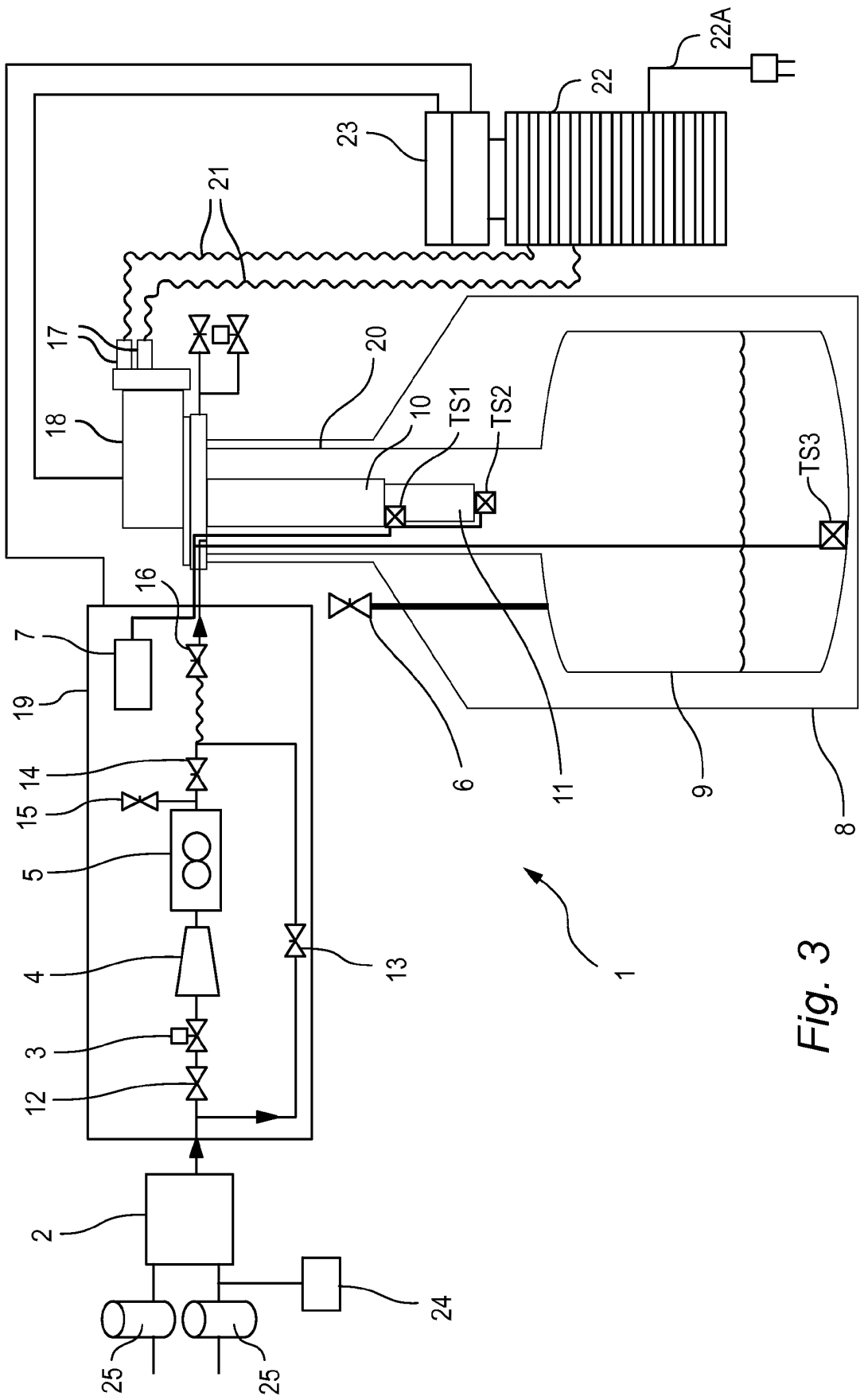
22A
22
23
21
17
18
20
10
TS1
TS2
TS3
16
7
19
14
15
5
4
3
12
2
13
6
11
9
8
1
24
25
25

Fig. 3

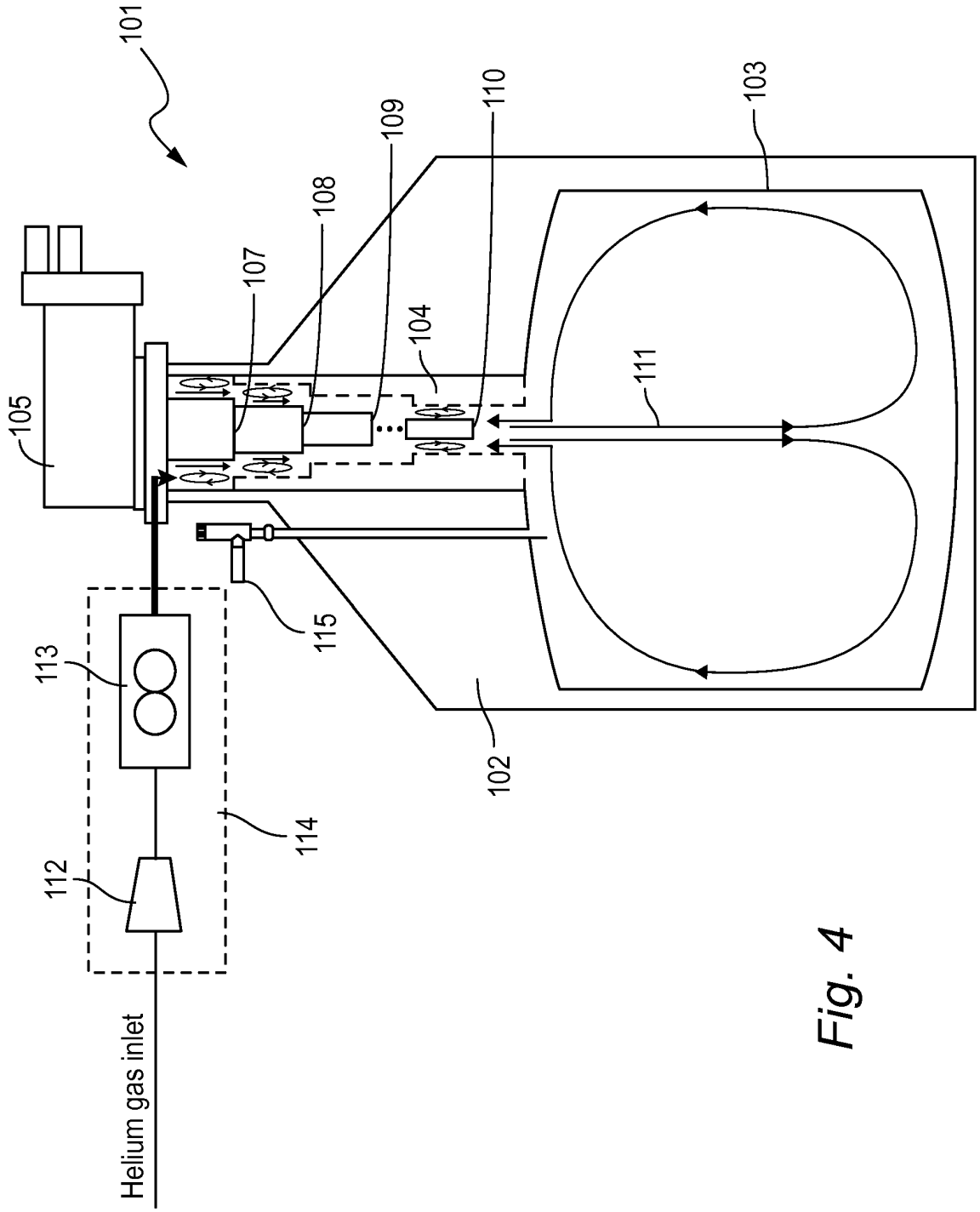
101
105
107
108
109
110
103
104
111
115
113
102
114
112
Helium gas inlet

Fig. 4

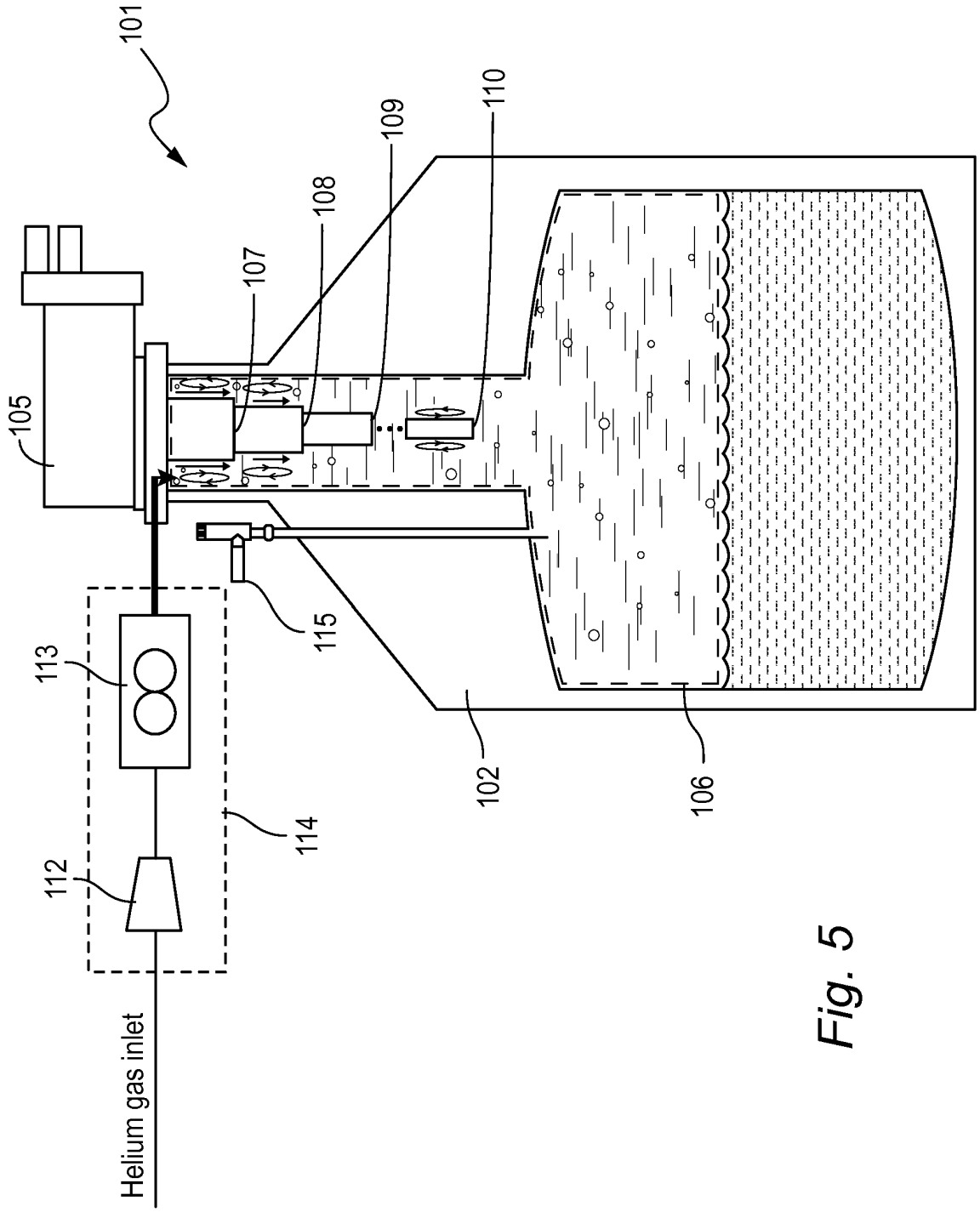
101
105
107
108
109
110
113
112
114
115
102
106
Helium gas inlet

Fig. 5

REFERENCES CITED IN THE DESCRIPTION

This list of references cited by the applicant is for the reader's convenience only. It does not form part of the European patent document. Even though great care has been taken in compiling the references, errors or omissions cannot be excluded and the EPO disclaims all liability in this regard.

Patent documents cited in the description

- US 2009293505 A **[0001] [0010]**
- GB 2457054 A **[0010]**